MANUFACTURING QUALITY LAWN CARE EQUIPMENT SINCE 1945

Owner's Manual

UTV Universal Front Receiver Hitch

Model No. 10260

IMPORTANT
Read and follow all Safety Precautions and Instructions Before Operating this Equipment.

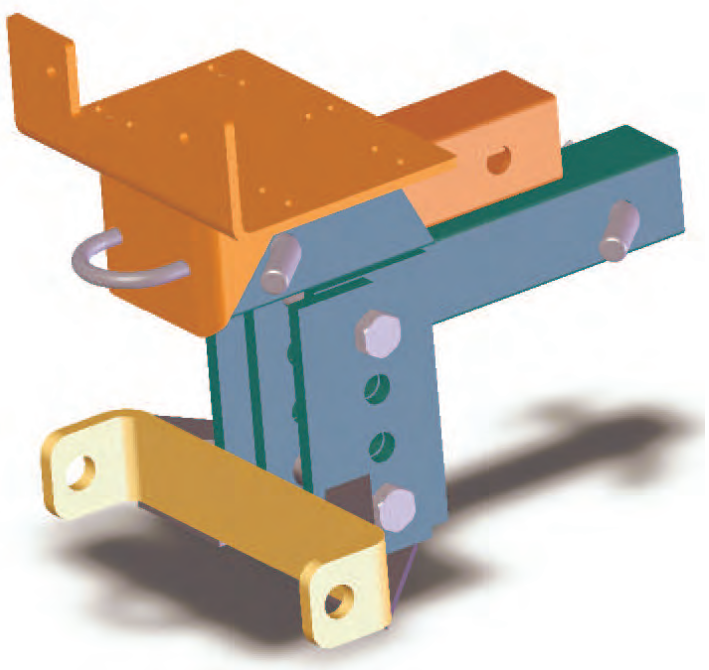

ATV ACCESSORIES

Sold as Separate Pieces!!!!

ASSEMBLY
OPERATION
SERVICE AND ADJUSTMENT
REPAIR PARTS

Made In The
USA

1602 CORPORATE DRIVE PO BOX 67 WARRENSBURG, MISSOURI 64093
PH 660.747.8183 FAX 660.747.8650
swisherinc.com

The manufacturer's warranty to the original consumer purchaser is: This product is free from defects in materials and workmanship for a period of one (1) year from the date of purchase by the original consumer purchaser. We will repair or replace, at our discretion, parts found to be defective due to materials or workmanship. This warranty is subject to the following limitations and exclusions:

1) Commercial Use	The warranty period for any product used for commercial or rental is limited to ninety (90) days from the date of original purchase.
2) Limitations	This warranty applies only to products which have been properly assembled, adjusted, and operated in accordance with the instructions contained within this manual. This warranty does not apply to any product of Swisher Mower Co., Inc., that has been subject to alteration, misuse, abuse, improper assembly or installation, or shipping damage.
3) Exclusions	Excluded from this warranty are normal wear, normal adjustments, and normal maintenance.

In the event you have a claim under this warranty, you must return the product to an authorized service dealer. All transportation charges, damage, or loss incurred during transportation of parts submitted for replacement or repair under this warranty shall be borne by the purchaser. Should you have any questions concerning this warranty, please contact us toll-free at 1-800-222-8183. The model number, serial number, date of purchase, and the name of the authorized Swisher dealer from whom you purchased the product will be needed before any warranty claim can be processed.

THIS WARRANTY DOES NOT APPLY TO ANY INCIDENTAL OR CONSEQUENTIAL DAMAGES AND ANY IMPLIED WARRANTIES
ARE LIMITED TO THE SAME TIME PERIODS STATED HEREIN
FOR ALL EXPRESSED WARRANTIES.

Some states do not allow the limitation of consequential damages or limitations on how long an implied warranty may last, so the above limitations or exclusions may not apply to you. This warranty gives you specific legal rights and you may have other rights, which vary from state-to-state. This is a limited warranty as defined by the Magnuson-Moss Act of 1975.

SAFETY PRECAUTIONS & DECALS

This Safety Alert Symbol indicates important messages in this manual. When you see this symbol, carefully read the message that follows and be alert to the possibility of personal injury.

Read this manual completely. Failure to observe the following safety instructions could result in serious injury or death.

- Read the manual. Learn to operate this machine safely.
- Keep the operating speed LOW!!!!! Do not operate over 5 MPH (8KMH).
- Allow only responsible adults who are familiar with these instructions to operate this machine. Never allow children to operate this machine.
- Be sure the area is clear of other people before operating. Children are often attracted to the machine and the operating activity. **Never assume that children will remain where you last saw them.** Keep children under the watchful care of another responsible adult.
- Watch for traffic when operating near or crossing roadways.
- Do not operate the attachment if it has been dropped or damaged in any manner. Repair as necessary.
- Stop and inspect the equipment if you strike an object. Repair if necessary, before restarting.
- Dress properly. Do not operate when bare foot or wearing open sandals.
- Do not operate the machine while under the influence of alcohol or drugs.
- Never tamper with safety devices. Check their proper operation regularly.
- Operate attachments up and down slopes. There is a significant risk of overturns when operating across slopes.
- **Never make adjustments or repairs with the ATV engine running.**

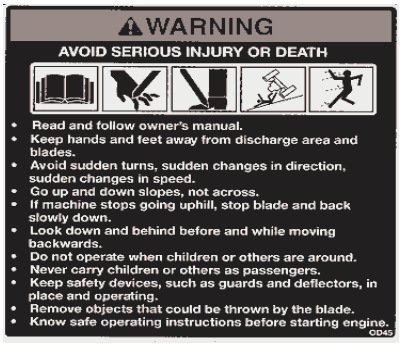

OD45 Warning Decal

OD55 Danger Decal

- Operate attachments up and down slopes. There is significant risk of overturns when operating across slopes.

- Stop and inspect the equipment if you strike an object. Repair, if necessary, before restarting.

- Never make adjustments or repairs with the engine running.

⚠ WARNING

AVOID SERIOUS INJURY OR DEATH

- **Read owner's manuals, operating instructions, and warning labels before operation.**
- **Do not exceed 5 MPH (8KMH) with blade installed.**
- **Contact with hidden stationary objects may cause sudden stop or loss of vehicle control.**
- **Do not operate on slopes greater than 10˚.**
- **Do not stand or ride on plow at any time.**
- **Keep bystanders away from vehicle and blade when operating vehicle or adjusting blade.**
- **Before adjusting blade, stop engine, set park brake, raise blade, and lock blade in the up position.**
- **Do not attempt to raise blade by hand, use the lift mechanism only.**
- **Keep hands and feet away from the area under blade and away from moving parts.**
- **Lower the blade to down position when vehicle is not in use.**
- **Inspect plow mechanism before use. Replace all worn or damaged parts before operating.**

OD19-A

INSTALLATION OF ACCESSORY MOUNT

TO ENSURE PROPER INSTALLATION, CARFULLY FOLLOW ALL INSTRUCTIONS LISTED BELOW

RECEIVER AND WINCH MOUNT KIT

1. Remove all parts from carton and layout as illustrated by the manual
2. Identify all parts with the numbers
3. Prepare the vehicle for installation of the receiver hitch and place on a flat surface
4. Install "Stepped Receiver" #9145TK into the receiver on the vehicle and secure with 1 bent pin # NB702 and Hair Pin #NB603
5. Place "Accessory Mount" #9504TK on to the steeped receiver and slip two 5/8-11 X 4 ½ bolts # NB701 into the aligning holes.
6. Measure from the ground to the center of the Accessory Mount hole as shown in Figure #1
7. Adjust the Accessory Mount to obtain the closet height to 8 Inches or higher
8. Place one 5/8-11 X 4 ½ Bolt NB701 into the upper most hole of the Accessory Mount Bracket, Place spacer between mounting plate and the second bolt into the lowest hole of the Stepped receiver, This spreads the bolts apart

REFER TO FIGURE 1 WHILE INSTALLING THE ACCESSORY MOUNT

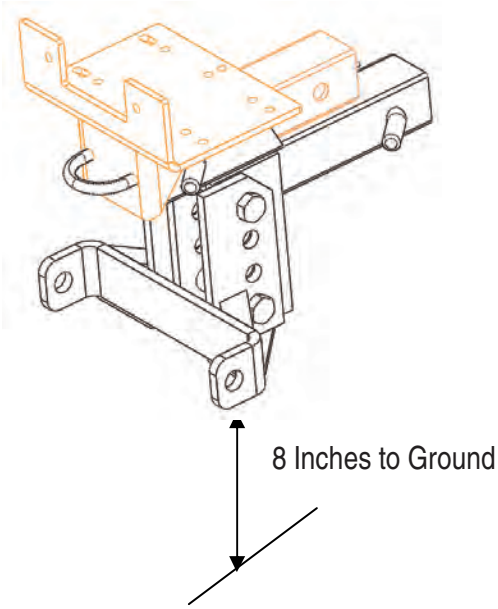

Figure 1

INSTALLING WINCH TO WINCH MOUNT

1. The Winch and Roller Fairlead are supplied by Other parties, We have made every attempt to provide the proper mounting holes to cover all of the popular models
2. Install the winch to the Winch manufactures specifications.
3. Install the "Roller Fairlead" to the mount with the bolts coming from the back. This gives the maximum amount of room for the winch.
4. After the winch and roller fairlead have been mounted and tightened securely , Install the mount into the receiver to the rearward most position and secure with Bent Pin # NB702. The rearward position effects the angle and position of the cable on the accessory.

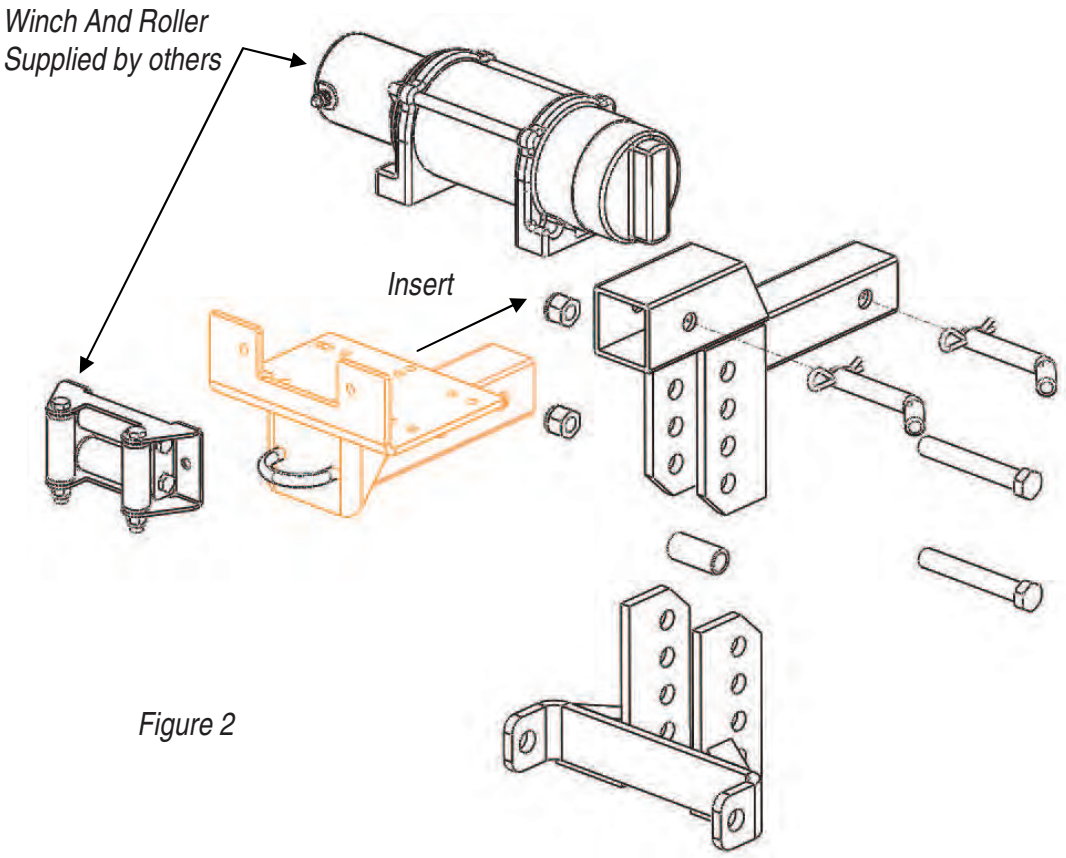

Figure 2

Receiver Hitch
Model # 10260

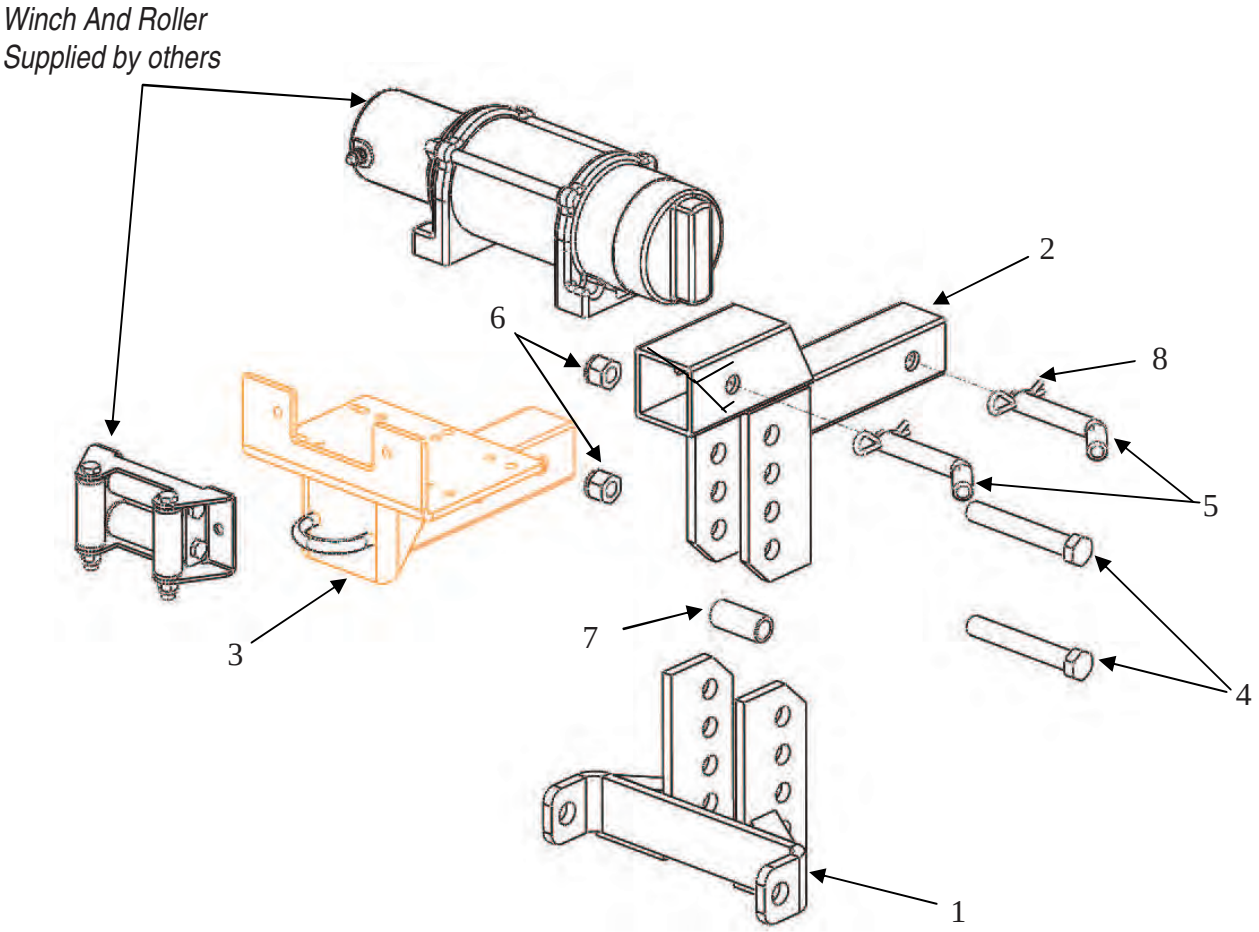

ITEM NO.	PART NO.	DESCRIPTION
1	9504TK	Accessory Mount
2	10256TK	Stepped Receiver
3	10258TK	Winch Mount
4	NB-701	5/8-11 X 4 1/2 Hex Hd Bolt
5	NB-702	5/8 x 3 Bent Pin
6	NB-561	5/8-11 Lock Nut
7	9147TK	Spacer
8	NB603	# 10 Hair Pin

MANUFACTURING QUALITY LAWN CARE EQUIPMENT SINCE 1945

Owner's Manual

UTV Universal Front Receiver Hitch

Model No. 10260

IMPORTANT
Read and follow all Safety Precautions and Instructions Before Operating this Equipment.

WHEN ORDERING PARTS, PLEASE HAVE THE FOLLOWING INORMATION AVAILABLE:

* PRODUCT – _____
* MODEL NUMBER - _____
* PART NUMBER WITH PAINT CODE
* PART DESCRIPTION

TELEPHONE - 1-800-222-8183
FAX - 1-660-747-8650

SWISHER MOWER & MACHINE CO. INC.
1602 CORPORATE DRIVE
P.O. BOX 67
WARRENSBURG, MO 64093

For online parts ordering please visit us online at:

www.swisherinc.com