MANUFACTURING QUALITY LAWN CARE EQUIPMENT SINCE 1945

Owner's Manual

Game Cart/Carrier 10568

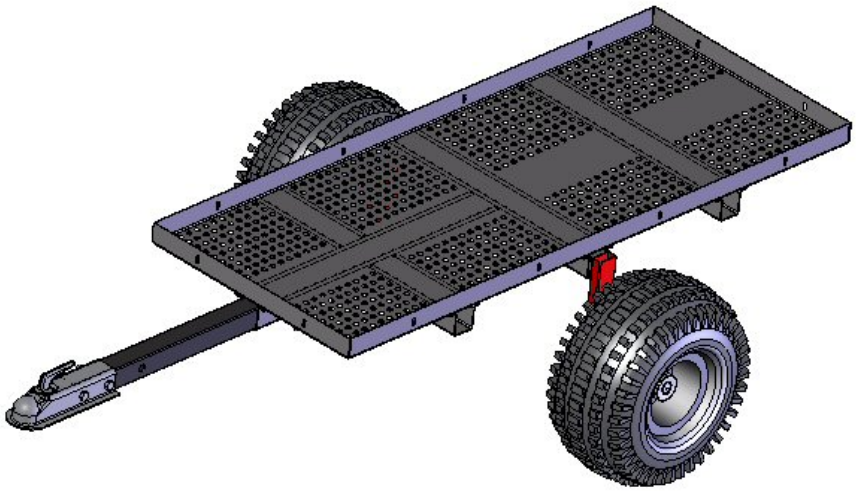

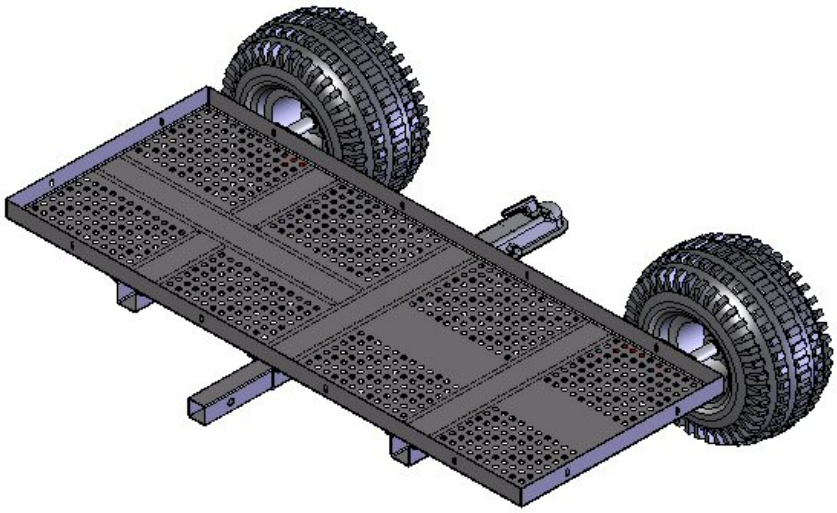

IMPORTANT
Read and follow all Safety Precautions and Instructions Before Operating this Equipment.

ATV ACCESSORIES

ASSEMBLY
OPERATION
SERVICE AND ADJUSTMENT
REPAIR PARTS

Made In The
USA

1602 CORPORATE DRIVE PO BOX 67 WARRENSBURG, MISSOURI 64093
PH 660.747.8183 FAX 660.747.8650
swisherinc.com

LIMITED WARRANTY

The manufacturer's warranty to the original consumer purchaser is: This product is free from defects in materials and workmanship for a period of one (1) year from the date of purchase by the original consumer purchaser. We will repair or replace, at our discretion, parts found to be defective due to materials or workmanship. This warranty is subject to the following limitations and exclusions:

1) Commercial Use	The warranty period for any product used for commercial or rental is limited to ninety (90) days from the date of original purchase.
2) Limitations	This warranty applies only to products which have been properly assembled, adjusted, and operated in accordance with the instructions contained within this manual. This warranty does not apply to any product of Swisher Mower Co., Inc., that has been subject to alteration, misuse, abuse, improper assembly or installation, or shipping damage.
3) Exclusions	Excluded from this warranty are normal wear, normal adjustments, and normal maintenance.

In the event you have a claim under this warranty, you must return the product to an authorized service dealer. All transportation charges, damage, or loss incurred during transportation of parts submitted for replacement or repair under this warranty shall be borne by the purchaser. Should you have any questions concerning this warranty, please contact us toll-free at 1-800-222-8183. The model number, serial number, date of purchase, and the name of the authorized Swisher dealer from whom you purchased the product will be needed before any warranty claim can be processed.

THIS WARRANTY DOES NOT APPLY TO ANY INCIDENTAL OR CONSEQUENTIAL DAMAGES AND ANY IMPLIED WARRANTIES ARE LIMITED TO THE SAME TIME PERIODS STATED HEREIN FOR ALL EXPRESSED WARRANTIES.

Some states do not allow the limitation of consequential damages or limitations on how long an implied warranty may last, so the above limitations or exclusions may not apply to you. This warranty gives you specific legal rights and you may have other rights, which vary from state-to-state. This is a limited warranty as defined by the Magnuson-Moss Act of 1975.

Operate attachments up and down slopes. There is significant risk of overturns when operating across slopes.

Stop and inspect the equipment if you strike an object. Repair, if necessary, before restarting.

Never make adjustments or repairs with the ATV engine running.

SAFETY PRECAUTIONS & DECALS

This Safety Alert Symbol indicates important messages in this manual. When you see this symbol, carefully read the message that follows and be alert to the possibility of personal injury.

Read this manual completely. Failure to observe the following safety instructions could result in serious injury or death.

- Read the manual. Learn to use this product safely.
- **Do not** load over 500 LBS (227 KG) on cart/carrier or exceed vehicles receiver capacity.
- Balance loads over the center of the cart/carrier as much as possible.
- Secure loads with straps or ropes before moving.
- **Do not carry passengers on cart/carrier!**
- **Do not** pull cart over 10 MPH (16 KMH).
- Allow only responsible adults who are familiar with these instructions to use this product. Never allow children to use this machine.
- Be sure the area is clear of other people before operating. Children are often attracted to the machine and the operating activity. ***Never assume that children will remain where you last saw them.*** Keep children under the watchful care of another responsible adult.
- Do not operate the attachment if it has been dropped or damaged in any manner. Repair as necessary.
- Do not operate the machine while under the influence of alcohol or drugs.
- Never tamper with safety devices. Check their proper operation regularly.

ASSEMBLY OF GAME CART/CARRIER

TO ENSURE PROPER INSTALLATION, CAREFULLY FOLLOW ALL INSTRUCTIONS LISTED BELOW

REFER TO FIGURE 1 WHILE ASSEMBLING THE GAME CART

Unpacking and Assembly Instructions:

- *Unpack parts and make sure all are included. If they are not contact the dealer where the Swisher Game Cart was purchased.*
- *Assemble the wheel (10) to the axle (8)* **(make sure valve stems are facing out)** *using two 25mm ID x 36mm OD x 2mm Shim (9), one E-Clip (11), and one Rubber Cap (12).*
- *With game cart pan (1) on the floor in an upside down position insert wheel & axle assemblies in the receiver tubes and secure in place using one 5/8 X 3 bent pin (6) and one 3/16 click pin (7).*
- *Insert Draw Tube (2) in the receiver and secure in place using one 5/8 x 3 bent pin (6) and one 3/16 click pin (7).*
- *Flip game cart assembly right side up. See Figure 2.*

Reconfiguring Game Cart/Carrier:

- *Remove 5/8 X 3 bent pins and slide out draw bar and the wheel & axle assemblies.*
- *Slide the draw bar through the center wheel & axle receiver and secure with one 5/8 X 3 bent pin and one 3/16 click pin. See Figure 3.*
- *Slide the wheel & axle assemblies into the outer receivers and secure with one 5/8 X 3 bent pin and one 3/16 click pin.*
- *You are now ready to slide your Game Cart/Carrier in the receiver of your vehicle.*

GAME CART REPLACEMENT PARTS AND ASSEMBLY INSTRUCTIONS

FIGURE 1

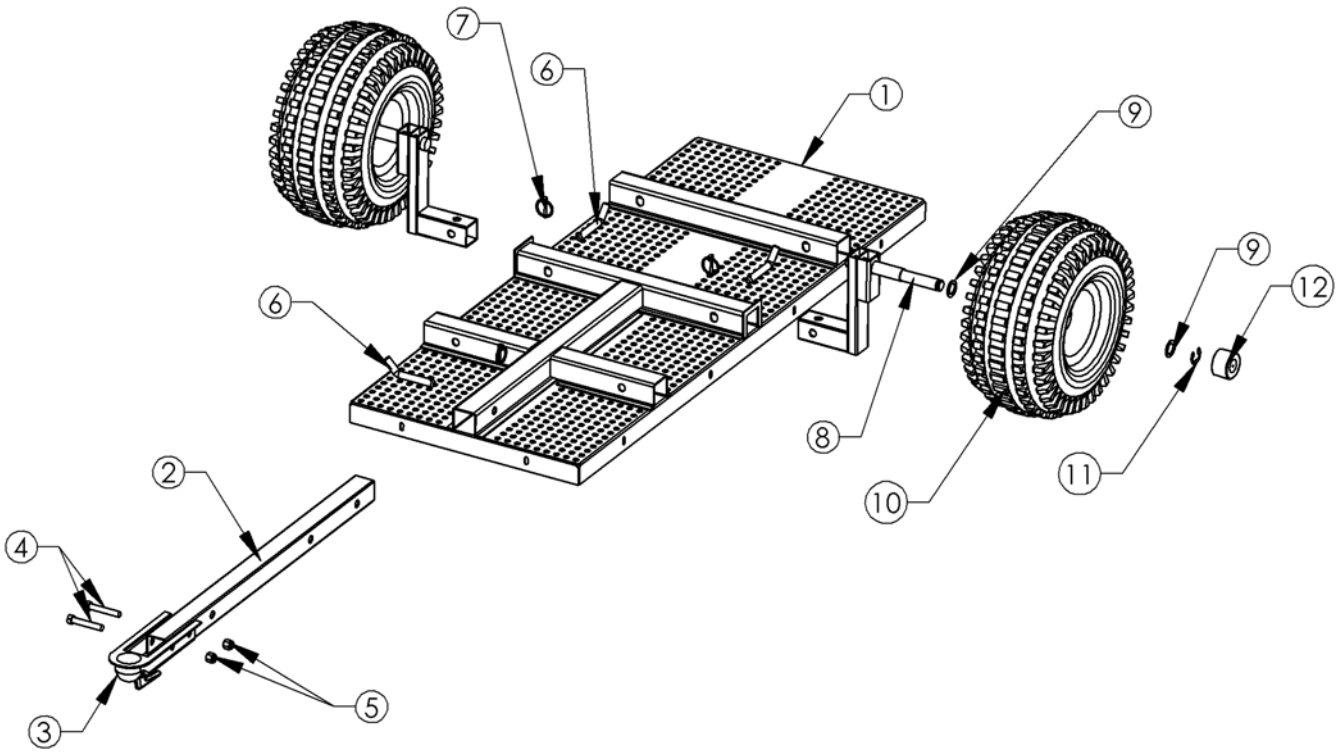

ITEM NO.	QTY.	PART NO.	DESCRIPTION
1	1	10558TK	Game Cart Pan Weldment
2	1	10552TK	Game Cart Draw Tube
3	1	7365	2" Ball Coupler
4	2	NB131	1/2-13 X 3 HCC GR5 Bolt ZP
5	2	NB281	1/2-13 Nyloc Nut
6	3	NB-702	5/8" x 3" Bent Pin
7	3	NB506	3/16 Click Pin
8	2	10556TK	Game Cart Axle Weldment
9	4	10914	1" x 1 1/2" x 14 GA
10	4	10394	Wheel & Tire for WT7002A AT22x11-8
11	2	10915	E-Style Retaining Ring, 1" Shaft
12	2	10916	Cap, 2.25" Shaft

GAME CART CONFIGURATIONS

FIGURE 2

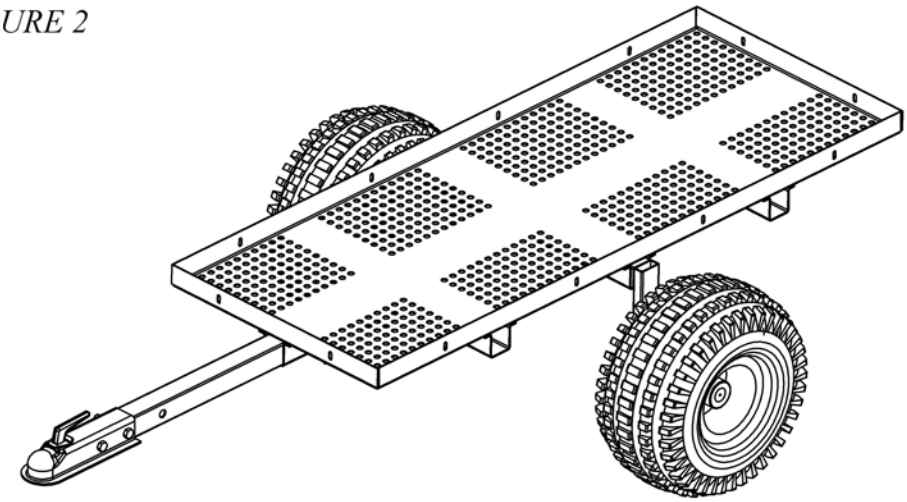

FIGURE 3

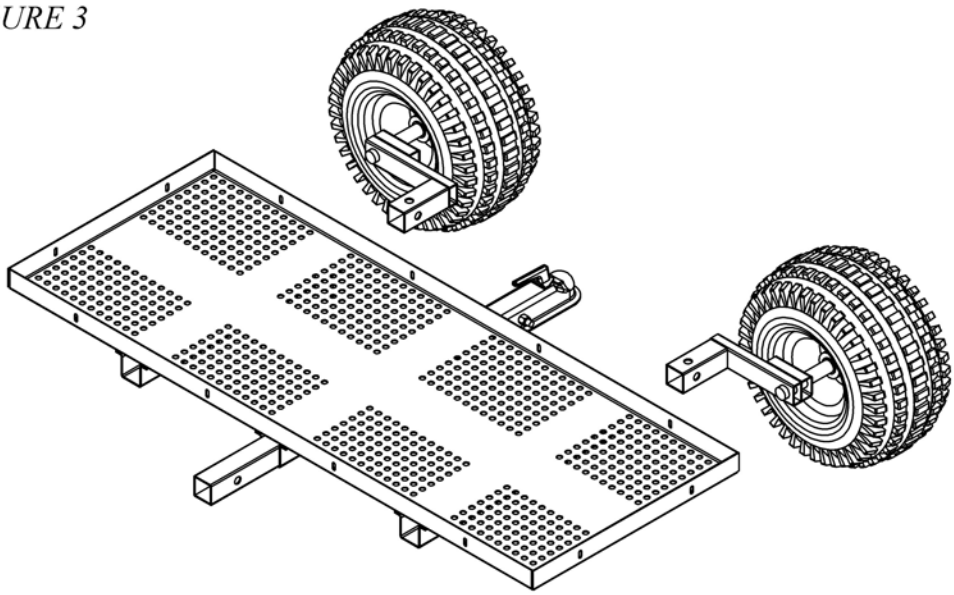

MANUFACTURING QUALITY LAWN CARE EQUIPMENT SINCE 1945

Owner's Manual

Game Cart/Carrier 10568

IMPORTANT
Read and follow all Safety Precautions and Instructions Before Operating this Equipment.

ATV ACCESSORIES

WHEN ORDERING PARTS, PLEASE HAVE THE FOLLOWING INORMATION AVAILABLE:

* PRODUCT – _____
* SERIAL NUMBER - _____
* MODEL NUMBER - _____
TYPE - _____
* PART NUMBER WITH PAINT CODE
* PART DESCRIPTION

TELEPHONE - 1-800-222-8183
FAX - 1-660-747-8650

SWISHER MOWER & MACHINE CO. INC.
1602 CORPORATE DRIVE
P.O. BOX 67
WARRENSBURG, MO 64093

swisherinc.com