1602 Corporate Drive
P.O. Box 67
Warrensburg, MO 64093
Phone 660-747-8183 800-222-8183
www.swisherinc.com

10283 Tru Plow 48”

Assembly

- Organize and Identify parts**.**

•Attach Lift arm (2) to the Tie Rod (1) with Bolt (3) and Nut (14). Snug to allow Arm to pivot
•Attach Axle mount (5) to Tie Rod (1) with Bolts (6), Washer (7), and Nuts (8&9). Repeat with other side. Snug but allow to pivot. Jam Nut (9) against Nut (8)
•Assemble Wheel as shown. Install Nut(12) allowing wheel to turn, Place this assembly into Tie Rod and lock in place with Nut (13). Check wheel to assure freedom to turn.
•Attach Wheel assembly to the main frame with Bolt (29) and Hardware (23,27, 28) as shown. Tighten securely.
•Install Plow Teeth with the hardware shown, tighten securely
•Install Tongue into mount tube and secure with Bolts (30) and Nut (31)

Operation

•To Raise unit, move lift arm (2) 90 degrees to the tie rod and rotate. Lock in place with Safety Hitch Pins . Note: two position have been provided
•After locking in position. Place the lift handle in the transport position and lock in place with a Safety Hitch Pin.
•To Lower the unit reverse the operation.
•Additional weight may be needed. The top of the plow is sized for Concrete blocks. These may need to be tied down through the holes provided.

Item #	Description	Part #	Qty.
1	Tie Rod Weldment	10380TK	1
2	Lift Arm	10390TK	1
3	3/8-16 X 1 1/2 Bolt	NB302	1
4	1 3/4" Safety Hitch Pin	NB664	1
5	Axle Mount	10373TK	2
6	1/2-13 X 2 Hex Bolt	NB509	2
7	1/2 Washer	NB555	28
8	1/2-13 Nut	NB213Z	2
9	1/2-13 Nyloc Nut	NB281	2
10	7" Wheel	025145	2
11	1/2-13 X 3 Hex Bolt	NB131	2
12	1/2-13 Jam Nut	NB118	2
13	1/2-13 2-Way Jam Lock Nut	NB121	2
14	3/8-16 Nyloc Nut	NB207	1
15	2 1/2" Safety Hitch Pin	H11	2

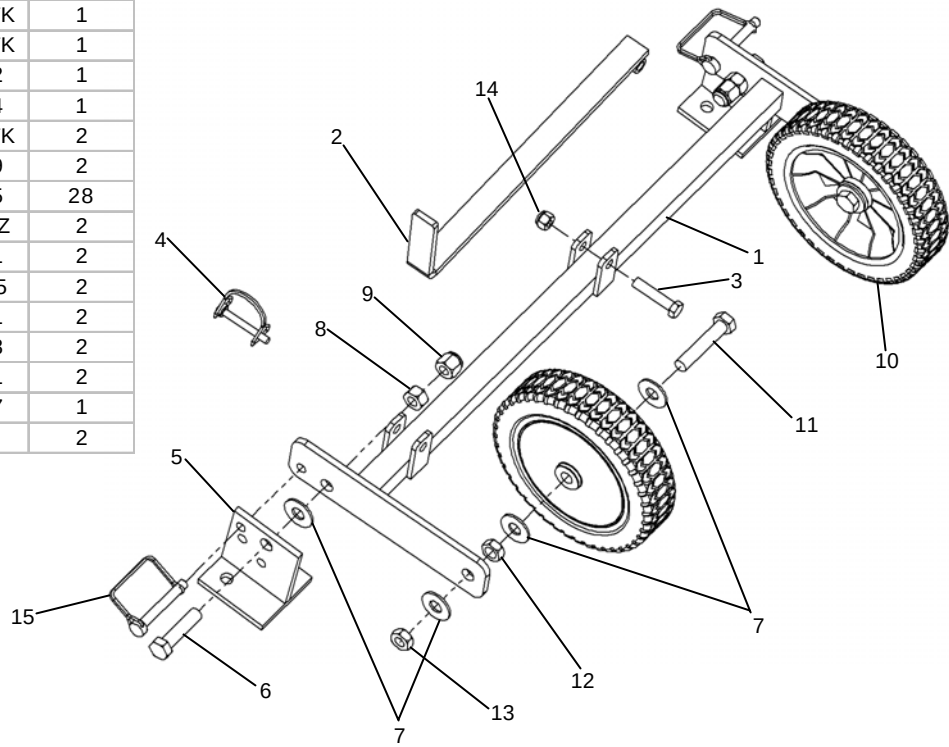

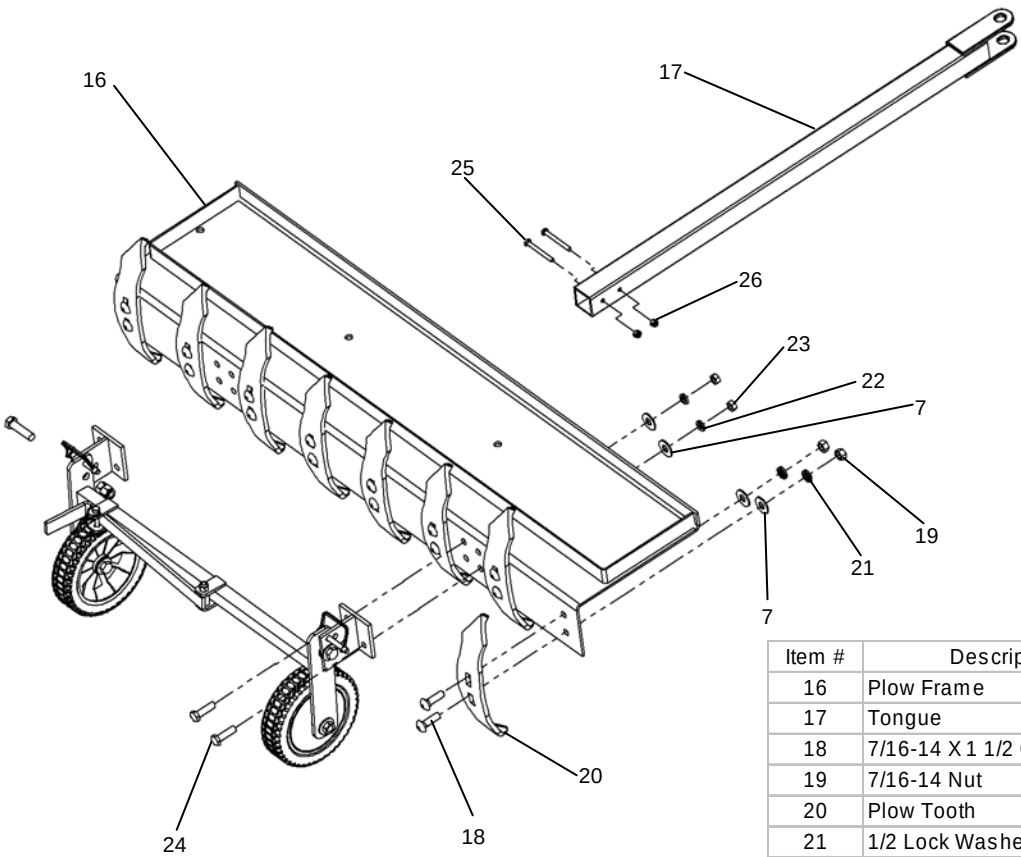

Item #	Descriptiom	Part #	Qty.
16	Plow Frame	10382TK	1
17	Tongue	10169TK	1
18	7/16-14 X 1 1/2 Carriage Bolt	10282	16
19	7/16-14 Nut	NB692	16
20	Plow Tooth	10149	8
21	1/2 Lock Washer	NB508	16
22	7/16 Lock Washer	10146	4
23	7/16-20 Nut	NB157	4
24	7/16-20 X 1 1/2 Hex Bolt	NB637	4
25	1/4-20 X 2 1/2 Hex Bolt	NB163	2
26	1/4-20 Nyloc Nut	NB180	2