swisherinc.com

OWNER'S MANUAL

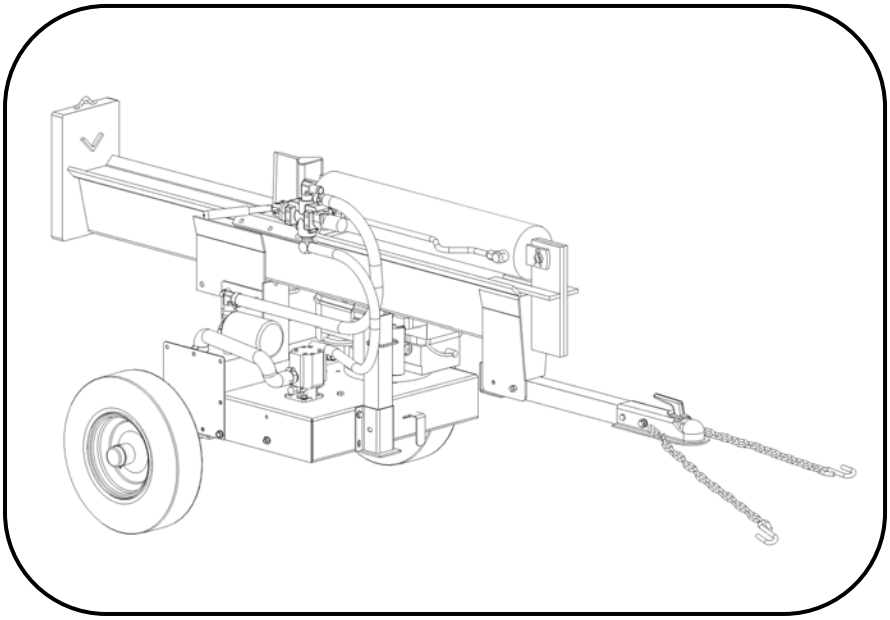

MODEL NO. LS11534A

STARTING SERIAL #:
L207-199001
ENGING SERIAL #
L209-334001

LOG SPLITTER

Safety
Assembly
Operation
Service and Adjustment
Repair Parts

IMPORTANT

Read and follow all Safety Precautions and Instructions before operating this equipment.

Rev. 07-199

1602 CORPORATE DRIVE, WARRENSBURG, MISSOURI 64093 PHONE 660-747-8183
FAX 660-747-8650

Manufacturing quality lawn care equipment since 1945

Made In The ***USA***

11328

LIMITED WARRANTY

The manufacturer's warranty to the original consumer purchaser is: This product is free from defects in materials and workmanship for a period of two (2) year from the date of purchase by the original consumer purchaser. We will repair or replace, at our discretion, parts found to be defective due to materials or workmanship. This warranty is subject to the following limitations and exclusions:

1)	Engine Warranty	All engines utilized on our products have a separate warranty extended to them by the individual engine manufacturer. Any engine service difficulty is the responsibility of the engine manufacturer and in no way is Swisher Mower Co., Inc. or its agents responsible for the engine warranty. The Briggs & Stratton Engine Service Hot-Line is 1-800-233-3723. The Tecumseh Engine Service Hot-Line is 1-800-558-5402.
2)	Commercial Use	The warranty period for any product used for commercial or rental is limited to ninety (90) days from the date of original purchase.
3)	Limitation	This warranty applies only to products which have been properly assembled, adjusted, and operated in accordance with the instructions contained within this manual. This warranty does not apply to any product of Swisher Mower Co., Inc., that has been subject to alteration, misuse, abuse, improper assembly or installation, shipping damage, or to normal wear of product.
4)	Exclusions	Excluded from this warranty are normal wear, normal adjustments, and normal maintenance. The pump, valve, and cylinder each carry separate manufacture's warranties. The valve and cylinder both carry a one (1) year limited warranty. The pump carries a two (2) year limited warranty.

In the event you have a claim under this warranty, you must return the product to an authorized service dealer. All transportation charges, damage, or loss incurred during transportation of parts submitted for replacement or repair under this warranty shall be borne by the purchaser. Should you have any questions concerning this warranty, please contact us toll-free at 1-800-222-8183. The model number, serial number, date of purchase, and the name of the authorized Swisher dealer from whom you purchased the splitter will be needed before any warranty claim can be processed.

THIS WARRANTY DOES NOT APPLY TO ANY INCIDENTAL OR CONSEQUENTIAL DAMAGES AND ANY IMPLIED WARRANTIES ARE LIMITED TO THE SAME TIME PERIODS STATED HEREIN FOR ALL EXPRESSED WARRANTIES. Some states do not allow the limitation of consequential damages or limitations on how long an implied warranty may last, so the above limitations or exclusions may not apply to you. This warranty gives you specific legal rights and you may have other rights, which vary from state-to-state. This is a limited warranty as defined by the Magnuson-Moss Act of 1975.

TABLE OF CONTENTS

WARRANTY……...….2
SAFETY..…….3-4
TOWING..……..……..5
OPERATION……6-8
MAINTENANCE.…….8
DECALS…..…….…….9
PARTS BREAKDOWN…….10-13
SPECIFICATIONS..……15

SAFETY PRECAUTIONS

This Safety Alert Symbol indicates important messages in this manual. When you see this symbol, carefully read the message that follows and be alert to the possibility of personal injury.

Read this manual completely. This machine can amputate hands, feet, and throw objects. Failure to observe the following safety instructions could result in serious injury or death.

WARNING: The engine exhaust from this product contains chemicals known to the state of California to cause cancer, birth defects or other reproductive harm.

DANGER: Your log splitter was built to be operated according to the rules for safe operation in this manual. As with any type of power equipment, carelessness or error on the part of the operator can result in serious injury. If you violate any of these rules, you may cause serious injury to yourself or others.

- Read the manual. Learn to operate this equipment in a safe manner.
- Do not under any circumstances alter this log splitter. This equipment was designed and engineered in accordance with operating instructions. Altering this equipment, or using this equipment in such a way as to circumvent its design capabilities and capacities, could result in serious injury or fatality and WILL VOID THE WARRANTY.
- Allow only responsible adults who have read this manual to operate this machine. Never allow children to operate this machine.
- Never use splitter for any other purpose than splitting wood. Any other use can result in injury. Your splitter is a precision piece of power equipment, not a toy. Therefore, exercise extreme caution at all times.
- Only a single operator is to load and operate the log splitter. Keep all others, including pets and children, a minimum of 20 feet away from your work area. More accidents occur when more than one person operates the log splitter than any other time.
- Always disconnect the spark plug wire and place the wire where it cannot contact the spark plug, to prevent accidental starting the engine when setting up, transporting, adjusting or repairing.
- Always wear protective gear such as safety goggles, protective hearing device, steel-toed shoes, and tight-fitting gloves without drawstrings or loose cuffs.
- Never wear loose clothing or jewelry that can be caught by moving parts of the splitter and pull you into it. Keep hair away from moving parts.
- Familiarize yourself with all of the controls in a safe environment before starting to work with this machine.

Fluid escaping from a very small hole can be almost invisible. Do not check for leaks with your hand. Escaping fluid under pressure can have sufficient force to penetrate skin, causing serious personal injury. Leaks can be located by passing a piece of cardboard or wood over the suspected leak and looking for discoloration. **IF injured by escaping fluid, see a doctor at once. Serious infection or reaction can develop if proper medical treatment is not administered immediately.**

- Split only one log at a time. Never attempt to split two logs on top of each other.
- Do not straddle or reach across the splitting area while operating the splitter.
- Do not step over splitter when the engine is running. You may trip or accidentally activate the splitting wedge. Walk around to get to the other side.
- Never place hands or feet between log and splitting wedge or between log and ram during forward or reverse stroke.
- Never attempt to load splitter while splitting wedge is in motion. When loading log splitter, place hands on the sides of the log, not the ends.
- Only use your hands to operate the control lever. Never use foot, knee, rope or any extension device.
- Always keep fingers clear of splits that open in log during splitter operation.
- When splitter is in the return mode, keep hands off the machine.
- Only operate splitter on level ground, not on the side of a hill. It could tip or rolling logs, poor footing, etc. could cause an accident.
- Never operate or allow someone to operate this equipment while under the influence of alcohol or drugs.
- Always block the wheels to prevent movement while using splitter.
- Never operate your splitter on wet, muddy, or icy surfaces. Safe footing is essential in preventing accidents.
- Never operate your splitter while it is attached to the tow vehicle.
- Never make adjustments or repairs with the engine running.
- Never attempt to split woods across the grain. Some types of wood may burst or fly out of your splitter and result in injury.
- Both ends of the log should be cut as squarely as possible to prevent the log from sliding out of the splitter during operation. Log length should be kept to 24” or less.

TOWING SAFETY

- Do not allow persons to ride on splitter. Do not carry any cargo or wood on your splitter. It may fall off and endanger vehicles that are following you.

- Be sure support leg is in the travel position and coupling secure. This must also be retracted so not to interfere while towing. Retract support leg by removing pin, sliding up, and replacing pin.

- Never exceed 45 MPH while towing your splitter. Be extra cautious when traveling over rough terrain, especially over railroad tracks.

- Always be careful while backing your splitter. You could jackknife your log splitter if not careful.

- Before using splitter, disconnect it from tow vehicle. A log could easily be pushed forward into the vehicle.

- See tire and wheel specifications for PSI while towing.

- Be aware of the extra length of splitter while turning, parking, crossing intersections, and in all driving situations.

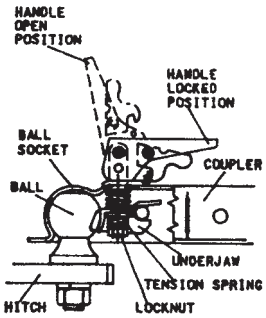

OPERATION INSTRUCTIONS
POSI-LOCK COUPLER

ADJUST COUPLER LOCKING PRESSURE ON BALL BEFORE USE. PLACE HANDLE IN LOCKED POSITION WITH BALL IN COUPLER. TIGHTEN LOCKNUT AGAINST TENSION SPRING SO THAT COUPLER IS NOT LOOSE ON BALL. CORRECT ADJUSTMENT WILL ALLOW HANDLE TO BE RELEASED WITH MODERATE PRESSURE APPLIED TO HANDLE.

TO OPEN, PULL UP ON COUPLER HANDLE AND ROTATE FORWARD. PLACE COUPLER ON BALL WHEN BALL IS COMPLETELY NESTED IN BALL SOCKET, ROTATE COUPLER HANDLE BACKWARD UNTIL HANDLE IS IN LOCKED POSITION.

AFTER TOWING FOR 50 MILES, CHECK COUPLER FOR TIGHTNESS ON BALL. ALWAYS CHECK TIGHTNESS BEFORE TOWING. BE SURE COUPLER HANDLE IS IN LOCKED POSITION.

WARNING:

NEVER EXCEED WEIGHT CAPACITY AND ALWAYS USE SAFETY CHAINS. ALWAYS USE CORRECT BALL SIZE, MAKING SURE BALL IS COMPLETELY INSERTED INTO COUPLER. LOCK COUPLER HANDLE SECURELY BEFORE TOWING. ALWAYS CHECK FOR DAMAGES AND REPLACE IF DAMAGED. AVOID SHARP TURNS AND STEEP VERTICAL ANGLES WHEN TOWING.

OPERATION

Intended use: This log splitter is intended and designed to only split wood. NEVER use for any other purposes. Doing so can cause injury or VOID THE WARRANTY.

ASSEMBLY INSTRUCTIONS

This log splitter has been partially assembled at the factory. Refer to the drawings and part lists should it become necessary to disassemble the unit for repair or replacement of parts. Inspect all components for damage.

WARNING: Exercise extreme caution, as parts are very heavy. Sufficient persons or mechanical handling equipment should be used.

IMPORTANT: This unit is shipped with oil but without gasoline in the engine. After assembly, see separate Engine Manual for proper fuel and oil recommendations.

FILLING THE HYDRAULIC RESERVOIR

Fill the hydraulic reservoir with at least 12 Quarts of Dextron III Automatic Transmission fluid or 10W AW hydraulic fluid. After the hydraulic reservoir and the engine crankcase are filled correctly with their respective oils, start the engine. Remember to set the throttle and turn on the fuel shut-off valve. The hydraulic pump should prime itself. With the engine running, move the hydraulic valve lever toward the wedge. This will cause the cylinder to extend and expel air. When the cylinder is fully extended, retract it. Repeat this procedure several times. (An erratic movement of the cylinder indicates that there is air in the system). Once the cylinder has a smooth and constant speed indicating that all air has been expelled, add another 4 quarts of oil, this should then bring the fluid level up to approximately 3” below the fill hole. This model requires approx. 18-19 Quarts of hydraulic fluid.

NOTE: If the tank is overfilled, it will tend to expel oil from the breather cap when the cylinder is retracted.

START UP

WARNING: DO NOT START OR RUN THE LOG SPLITTER WITHOUT OIL IN THE ENGINE AND HYDRAULIC RESERVOIR.

See separate Engine Manual for fuel and oil recommendations. Your log splitter has come equipped with a fuel shut-off valve for towing purposes.

Before starting engine make sure crankcase is filled correctly with oil and the proper fuel has been used. The engine will only start when the throttle lever and fuel shut-off valve are turned to their ON positions.

COLD WEATHER START UP

The Cold Weather Clutch enables the engine to be started without having to pull through cold, thickened hydraulic fluid. Simply pull the handle out into locked position. Start engine, let it warm up, and release Cold Weather Clutch. After starting, assure that the lever has reengaged.

OPERATION

TOWING

This unit should not be towed on any street, highway, or public road without checking the existing federal, local, and state laws. Any licensing or modifications such as taillights, etc., need to comply with existing federal, local, or state vehicle requirements is the sole responsibility of the purchaser. Obey all regulations when towing on public roads and highways. See also **TOWING SAFETY**.

Be sure you are using the correct ball hitch size for the hitch coupler on the log splitter (2" ball). Be sure safety chains are properly connected. Leave enough slack in chains for turning. See **TOWING SAFETY** to read warnings about coupling.

Make sure beam attachment is locked in the horizontal position. NEVER tow splitter in the vertical position.

Turn the fuel shut-off valve OFF to prevent flooding of the engine while traveling.

TOWING AT NIGHT

The requirements for taillights are based on States regulations. Some states allow towing at night as long as the towed equipment does not visibly impair the tow vehicle taillights. This is based on a state, to state requirements. The customer is responsible for meeting the states requirements.

If a "Statement of Origin" is required in your state, see your local dealer to receive one.

OPERATION

1. Set up the log splitter in a clear, level area and block the wheels. The suction port on the tank should always be on the lower side of the log splitter.
2. Place a log on the beam, against the foot plate. Make sure the log is securely on the foot plate and up against the beam.
3. Depress the valve lever so that the cylinder will drive the wedge into the log. Extend the cylinder until the log splits or to the end of its stroke. If the log has not completely split after the cylinder has reached the end of its extension, retract the cylinder. NOTE:

Leaving the valve in the "actuate" position at the end of the stroke may damage the pump.

OPERATING POSITIONS

WARNING: THE LOG SPLITTER BEAM IS HEAVY AND CAN PINCH HANDS/FINGERS IF CARE IS NOT TAKEN.

STANDARD HORIZONTAL TO VERTICAL

The Standard Splitter has 2 operating positions: Horizontal, Vertical.
Remove pin from below beam. Do not remove bolt and nut. Rotate beam into vertical position and pin so beam cannot fall into horizontal position.
DO NOT TOW IN VERTICAL POSITION!

IMPORTANT: When operating splitter in wooded areas, obtain a spark arrestor for the exhaust system. See your local engine dealer.

When preparing logs, cut ends as square as possible. The maximum length of any logs should be only 24".

MAINTENANCE & STORAGE

WARNING: Disconnect spark plug before performing any maintenance or making adjustments.

RESERVOIR FLUID
Check the hydraulic fluid level in the reservoir tank before each use. Operating without an adequate oil supply will cause severe damage to the pump. Change the hydraulic fluid in the reservoir per manufacturers recommendations.

Be aware of the environment when disposing of used petroleum products. Please dispose of used hydraulic fluid, engine oil and any by products from the maintenance of your log splitter at approved recycling centers.

Should it become necessary to loosen or remove any hydraulic fitting or line, be sure to remove all pressure by shutting off the engine and moving the control handle back and forth several times.

NEVER remove the cap from the hydraulic tank or reservoir while your unit is running. Hot oil under pressure will cause injury.

Always store gasoline in an approved, tightly sealed container. Store container in a dry, cool place. Keep fuel away from gas appliances where fumes could contact open flame, pilot lights or sparks.

Do not operate your splitter in poor mechanical condition or when needing repair. Repair and replace worn or broken parts immediately.

Periodically tighten nuts, bolts, and hydraulic fittings.

The hydraulic system of your log splitter requires careful inspection, along with the mechanical parts. Be sure to replace frayed, kinked, or otherwise damaged hydraulic components.

The pressure relief valve on the splitter is preset at the factory. Do not adjust valve. Only a qualified service technician should perform this adjustment.

If the wedge becomes dull or nicked, it can be removed and sharpened. The wedge is heavy and may still have sharp edges, wear gloves while handling the wedge.

REPAIR PARTS

Your Swisher Log Splitter has been produced with components designed specifically to this machine. Although standard springs, hardware, etc. may look similar to parts used on other machinery, they may in some cases be made of a different construction and/or materials.

SAFETY DECALS

Replace decals immediately if damaged.

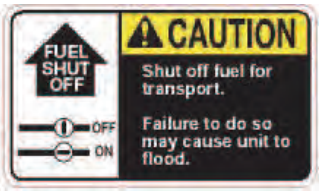

OD16 – FUEL SHUT OFF DECAL

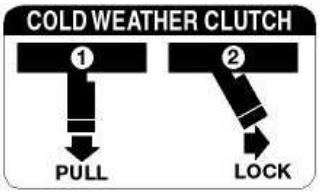

OD07 – COLD WEATHER DECAL

OD12 – HYDRAULIC FILL PLUG DECAL

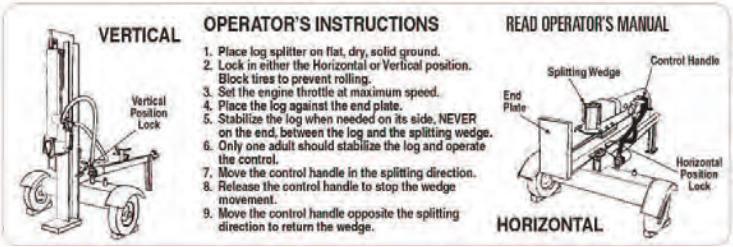

OD08 – OPERATOR INSTRUCTION DECAL

11427 – LS Next Generation Danger Decal

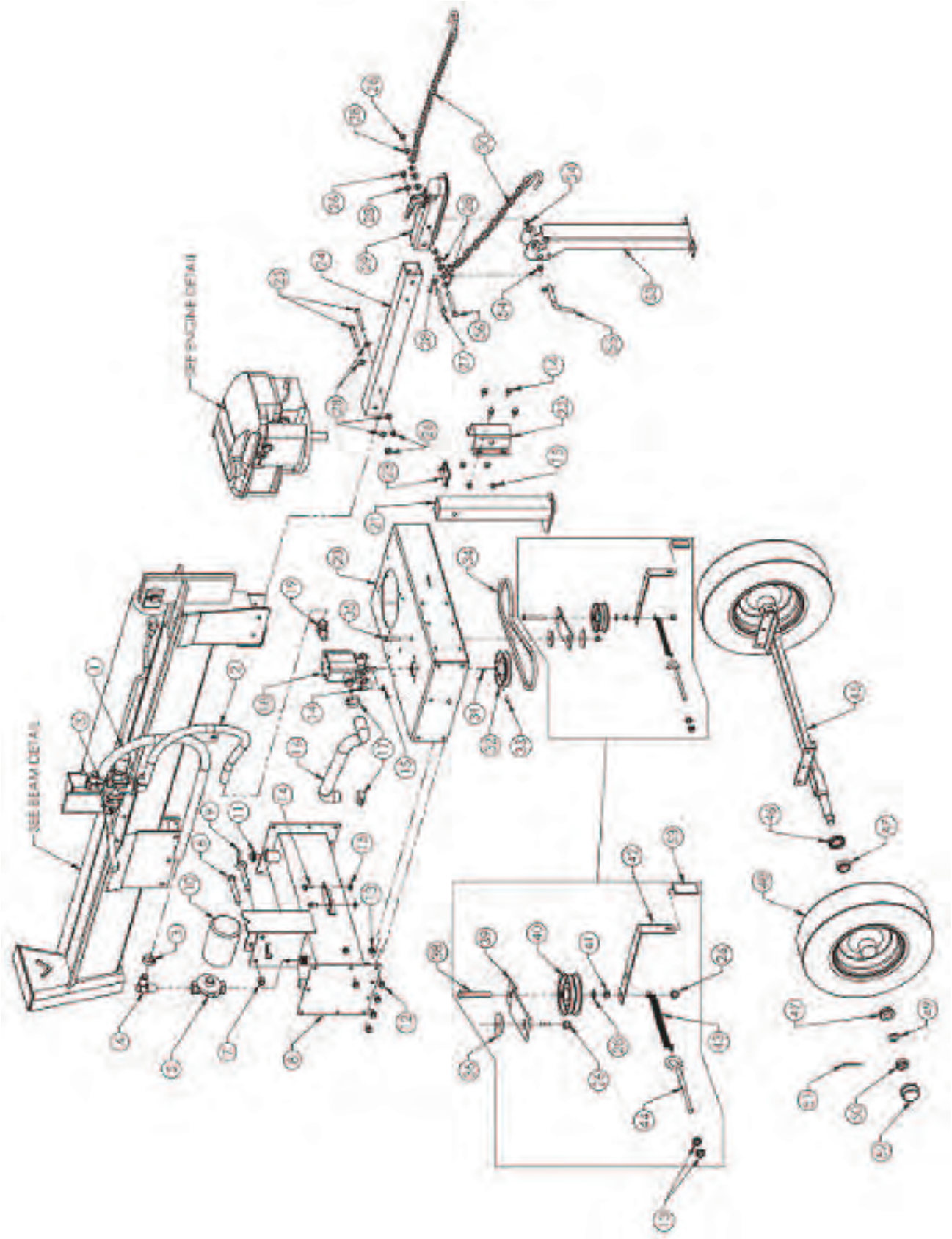

ASSEMBLY DETAIL

LS11534A

SERVICE PARTS

Please have Model and Serial Numbers ready when ordering parts.
Color cannot be guaranteed upon service parts.

ITEM NUMBER	DESCRIPTION	PART NUMBER
1	54" Return Hose	7290
2	Hydraulic Pressure Hose	15149
3	#12 Hose Clamp	LS5001
4	Return Line Fitting	7329
5	Filter Head	LS1112
6	Bolt 1/2-13 X 4 GR 5	NB132
7	Nut 1/2-13 Nyloc	NB121
8	Hydraulic Reservoir/Tank	11210TK
9	1/2 X 3 1/2 Hitch Pin w/Hair Pin	NB648
10	Filter Element	LS1113
11	3/4" NPT Filler Cap w/Hole	7379
12	Bolt 3/8-16 X 3/4 Serr Flange	NB780
13	Nut 3/8-16 Serr Flange	NB779
14	Bolt 5/16-18 X 3/4 Serr Flange	NB596
15	Nut 5/16-18 Serr Flange	NB170
16	18" Suction Hose	7346
17	#16 Hose Clamp	LS4999
18	Hydraulic Pump-LS11534A	LS2002B
19	Pressure Line Fitting	11248
20	Motor Base	11207TK
21	Support Leg	11220TK
22	Support Leg Bracket	11213TK
23	3/8 X 2 1/2 Safety Hitch Pin	H11
24	Tongue	11201TC
25	Bolt 3/8-16 X 3 GR 5	NB150
26	Nut 3/8-16 Nyloc	NB182
27	Bolt 3/8-16 X 3 1/2 GR 5	NB649
28	Washer 3/8 SAE	NB272
29	2" Ball Coupler	7365
30	Safety Chain w/ Hook	7366
31	1/8 X 1/2 #3 Woodruff Key	024002
32	Pump Pulley	7306
33	5/16-18 X 1/2 Set Screw w/Loctite	NB312
34	38" Belt	T38
35	Bolt 3/8-16 X 1 1/2 GR 5	NB107
36	Idler Bushing	6037
38	Bolt 3/8-16 X 2 1/2 GR 5	NB619
39	Idler Arm	6041TK
40	Idler Pulley	B527
41	Nut 3/8-16 2-Way Lock	NB280
42	Clutch Lever	11226TK
43	Clutch Spring	682S
44	Bolt 3/8-16 X 5 Turned Eye	11223
45	Axle Weldment	11208TK
46	Bearing Seal	2203S
47	Tapered Bearing	2203B
48	Tire & Wheel	7296
49	Washer 3/4ID X 1 1/4OD 10GA	NB184
50	Castle Nut	2203CN
51	Cotter Pin	NB633
52	Wheel Dust Cover	2203DC
53	Log Splitter Folding Support Leg Txt Bk	14924TK
54	Latch Pin Guide Bushing	7840Z
55	1/2 X 3 Bent Pin with Hair Pin	NB606
56	3/8-16 X 4 HCC GR5 ZP	NB645

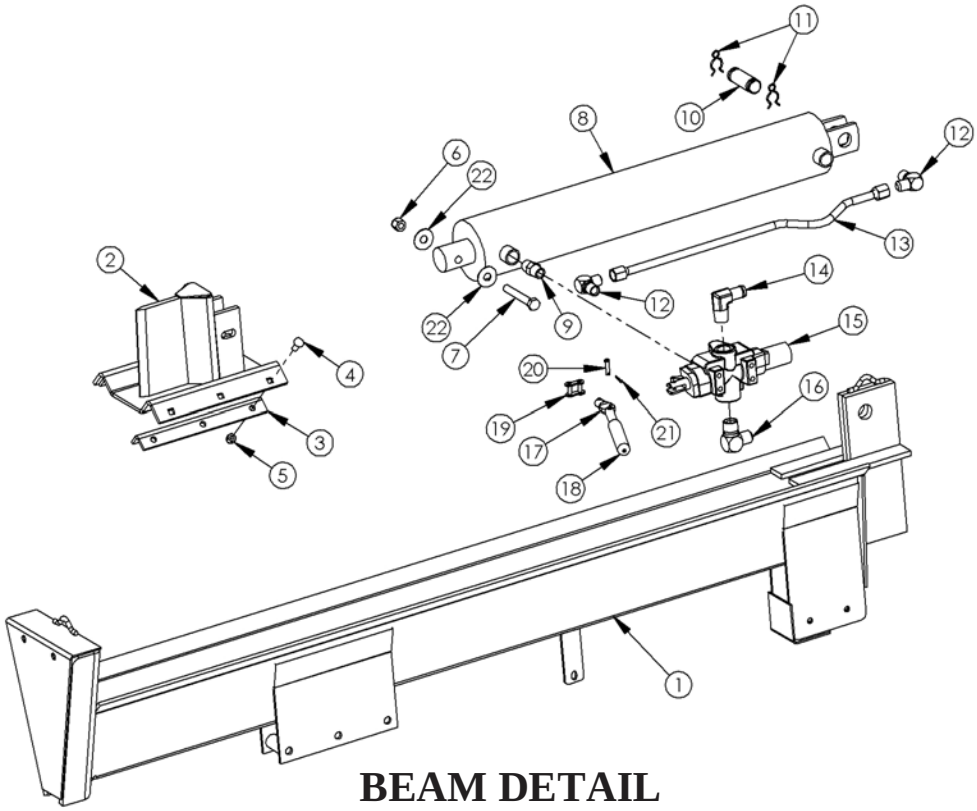

BEAM DETAIL

ALL MODELS

NOT ALL PARTS ARE ON ALL MODELS

ITEM NUMBER	DESCRIPTION	PART NUMBER
1	Beam Weldment	11322TC
2	Wedge Weldment	11910TK
3	Wedge GIB Angle	11858TK
4	Bolt 3/8-16 X 1 1/4" Carriage	10501
5	Nut 3/8-16 Nyloc	NB182
6	Nut 1/2-13 Nyloc Jam	NB121
7	Bolt - 1/2-13 X 3 1/4 GR8 Alloy ZY	12669
8	Ram Cylinder - LS11534A Model	7355TK
9	2-Way Pipe Nipple	7292
10	Steel Pin	7293
11	Clip Pin	NB642
12	Hydraulic Fitting	7291
13	Stationary Line Assembly	7288TK
14	Return Line Fitting	7329
15	Valve Control	7287TK
16	Valve Inlet Fitting	7387
17	Valve Control Handle	7423
18	Handle Grip	7425
19	Master Chain Link	7424
20	1/4 X 1 Clevis Pin	NB522
21	Cotter Pin	NB597
22	Washer	TR150W

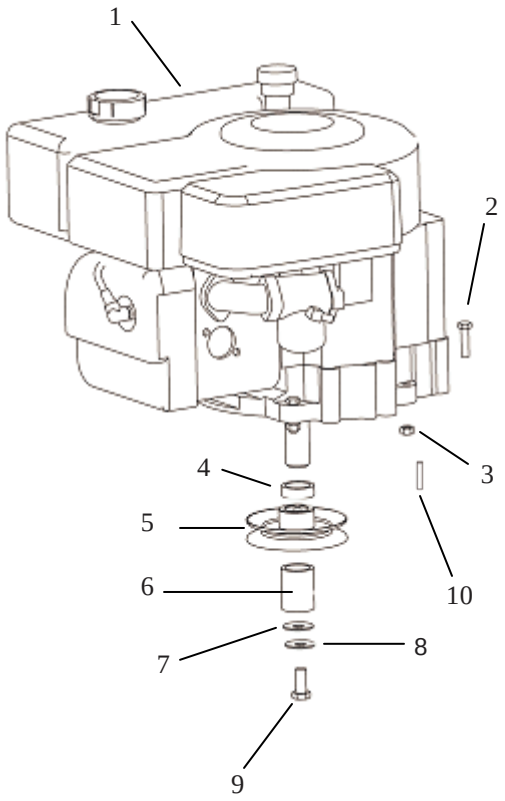

ENGINE DETAIL

LS11534A MODEL

ITEM #	DESCRIPTION	PART #
1	Engine	N/A
2	Bolt 5/16-18 X 1 1/4 Serr. Flange	NB253
3	Nut 5/16-18 Serr. Flange	NB170
4	Upper Spacer	689S
5	Engine Pulley	BB105
6	Lower Spacer	BB105S
7	Washer	TR150W
8	Washer Belleville	699
9	Bolt 7/16-20 X 1 GR 5 w/Loctite	NB452N
10	1/4 X 1 Keystock	9031
NOTSHOWN	Fuel Shut Off Valve (Inline)	7414
NOTSHOWN	Fuel Line Clamp	6FLC

NOTES:

SPECIFICATIONS

	Model
	LS11534A
Splitting Force	34 Tons
Engine	11.5 HP Briggs and Stratton I/C
Splitting Positions	Horizontal and Vertical
Cylinder Size	5 1/2" X 24"
Pump	2 Stage with Heavy Duty Bearings
Pump Specs	16 Gallons Per Minute
Valve	Auto Return
Drive System	Belt Drive 1:1 Ratio with Clutch for Easy Starting
Oil Capacity	18-19 Quarts
Maximum Log length	24"
Tire Specs	4.00 X 4.80 X 8 with High Speed Bearings
Metal Fenders	No
Ball Hitch	2" Ball
Unit Weight	550 lbs

OWNER'S MANUAL

MODEL NO. LS11534A

LOG SPLITTER

HOW TO ORDER REPAIR PARTS:

Each Log Splitter has its own serial number. Each engine has its own serial number. The serial number for the Log Splitter will be found on the right hand side of the hydraulic oil reservoir. The serial number for the engine will be found on the top of the blower fan housing.
All Log Splitter parts listed herein may be ordered directly from Swisher Mower & Machine Co. Inc., your nearest Swisher dealer, or from our website.
All engine parts may be ordered from the nearest dealer of the engine supplied with your log splitter. Parts subject to change without notice.

WHEN ORDERING PARTS, PLEASE HAVE THE FOLLOWING INFORMATION AVAILABLE:

* PRODUCT – SWISHER LOG SPLITTER
* SERIAL NUMBER - _____
* MODEL NUMBER - _____
* ENGINE MODEL NUMBER - _____
  TYPE - _____
* PART NUMBER
* PART DESCRIPTION

www.swisherinc.com
TELEPHONE - 1-800-222-8183
FAX - 1-660-747-8650

SWISHER MOWER & MACHINE CO. INC.
1602 CORPORATE DRIVE
WARRENSBURG, MO 64093

SWISHER MOWER & MACHINE CO. INC.