MANUFACTURING QUALITY LAWN CARE EQUIPMENT SINCE 1945

Owner's Manual

GC-07

7 Cubic foot Garden Cart

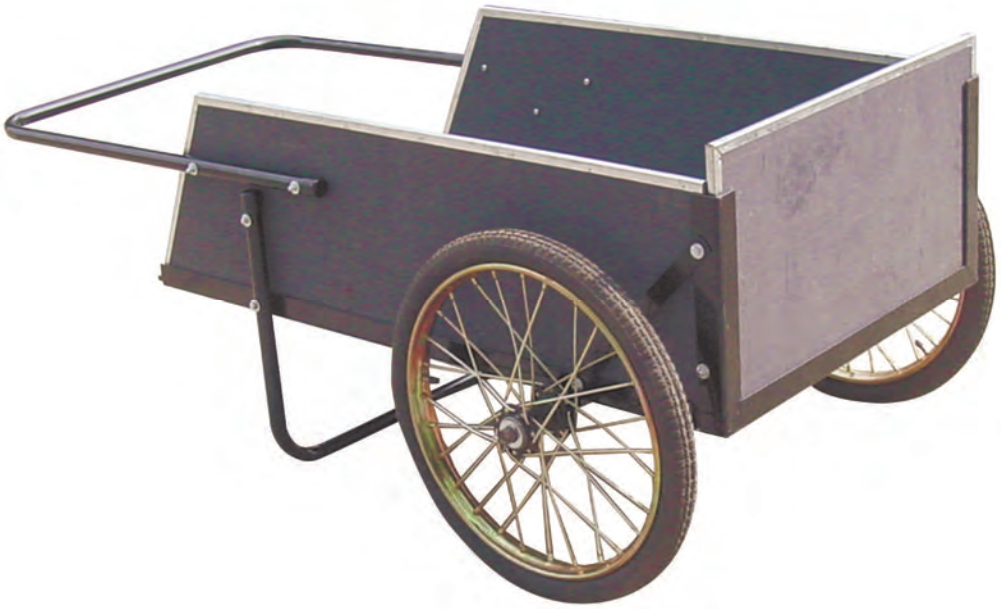

IMPORTANT
Read and follow all Safety Precautions and Instructions Before Operating this Equipment.

Made In CHINA

1602 CORPORATE DRIVE, PO BOX 67, WARRENSBURG, MISSOURI 64093
PH 660.747.8183 FAX 660.747.8650
swisherinc.com

RULES FOR SAFE OPERATION

Preventing accidents is the responsibility of every equipment operator. The following general safety precautions must be fully understood and followed by every operator.

1. Do not at any time carry passengers in this cart. This cart is designed for carrying materials only, and NEVER to carry passengers.
2. Be cautious of any steep grade or hills; stay clear of steep grades.
3. Use caution when loading cart to avoid tipping.
4. Avoid large holes and ditches when transporting loads.
5. CAPACITY OF THIS CART IS 300LBS. DO NOT OVERLOAD CART!

Your Garden Cart carton contains a hardware package with parts as shown in the chart below and in figure 1.

Contents of Hardware Pack: (See figure 1)

REF.	QTY.	DESCRIPTION
A	8	Screws,M6X50
B	4	Screws,M6X30
C	15	Screws,M6X25
D	4	Cotter Pins
E	27	Hex Nuts,M6
F	23	Flat Washer,Φ6
G	4	Lock Washer,Φ6
H	4	Large Flat Washer

HARDWARE REFERENCE CHART

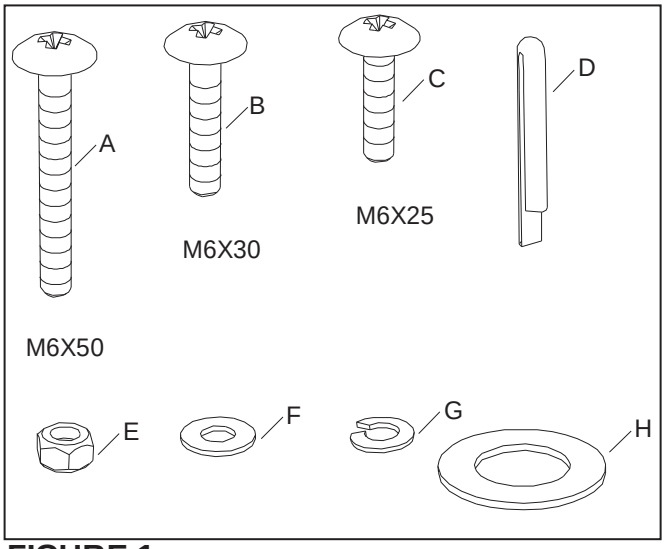

FIGURE 1

ASSEMBLY INSTRUCTIONS

TOOLS REQUIRED
(1) Screw Driver
(2) Pliers
(3) 10mm Wrench

When assembling your cart, place the heads of all screws to the inside and hex nuts with flat washers to the outside.

1. Lay the front angle assembly down (flat) on floor and stand the bottom panel in position as shown in figure 2.

NOTE

The bottom panel has one galvanized edge; this is the rear. The front edge has three holes. See figure 2.

2. Line up three holes in bottom panel with holes in front angle assembly. Start three M6X25 screws through bottom panel, then through angle. Secure screws with Φ6 flat washers and M6 hex nuts. **Tighten securely.** See figure 2.

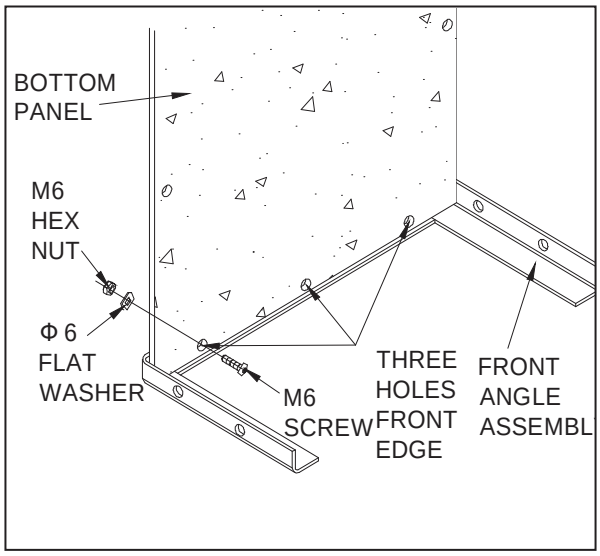

FIGURE 2

3. Turn the front angle assembly and bottom panel upside down as shown in figure 3.

4. Lay the two side angles on the bottom panel so that the two holes for the axle clamps are closer to the front angle assembly. See figure 3.

5. Secure both axle clamps to the side angles and the bottom panel using four M6X30 screws, lock washers and hex nuts. **Only finger tighten until axle is assembled**. See figure 3.

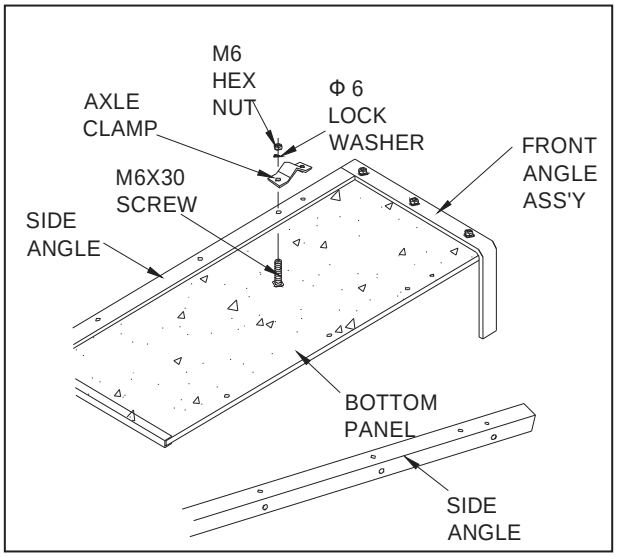

FIGURE 3

6. Secure both side angle assemblies to the bottom panel using four M6X25 screws, flat washers and hex nuts. **Only finger tighten until all four screws are in place**, then tighten securely. See figure 4.

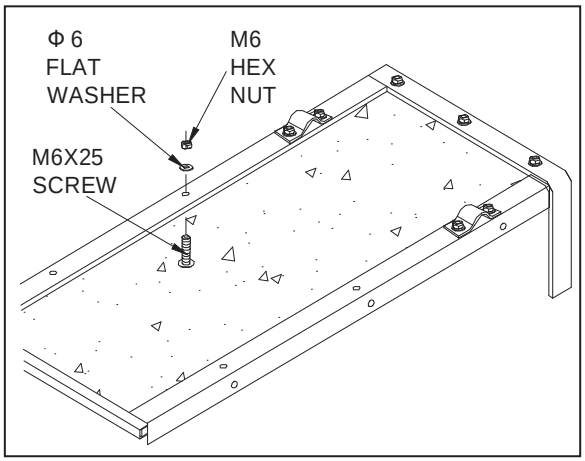

FIGURE 4

7. Stand the cart on its front end with the front angle assembly on the floor. See figure 5.

8. Temporarily place four large flat washers (used on wheel axle) on the inside of front angle assembly. See figure 5.

➡ NOTE

These washers act as shims and are just for assembly purposes. You will remove them later to use on axle.

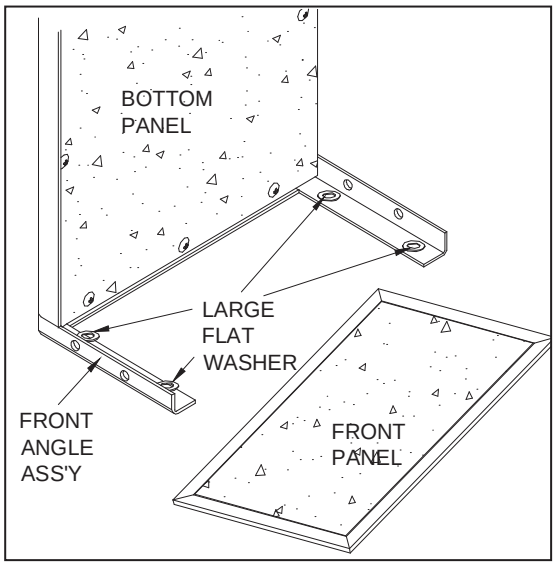

FIGURE 5

9. Lay the front panel down onto the front angle assembly, on top of the four large washers. See figure 6.

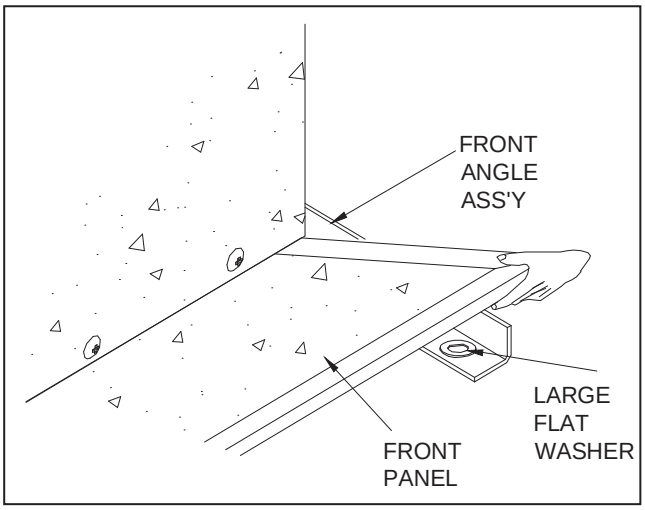

FIGURE 6

10. Place one side panel in position against a side angle and down on top of the front panel. Start one M6X25 screw through the center hole in side panel and side angle. Secure with hex nut and flat washer. See figure 7. **Only finger tighten at this time.**

11. Start one M6X25 screw through front hole on side panel and side angle. Start another M6X25 screw through top hole on side panel and front angle assembly. Next, place a support strap over these two screws and secure it with flat washers and hex nuts. **Only finger tighten at this time.** See figure 7.

12. Repeat steps 10 and 11 for the other side panel.

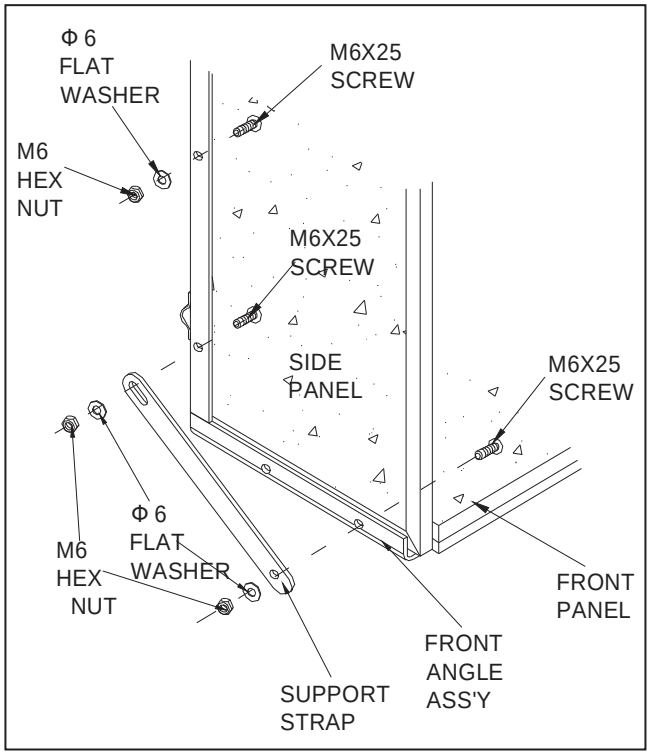

FIGURE 7

13. Assemble one M6X25 screw through bottom hole in side panel and front angle assembly. Secure with a flat washer and hex nut, **Only finger tighten at this time.** Repeat for the other side panel. See figure 8.

14. Securely Tighten all loose nuts and screws at this time.

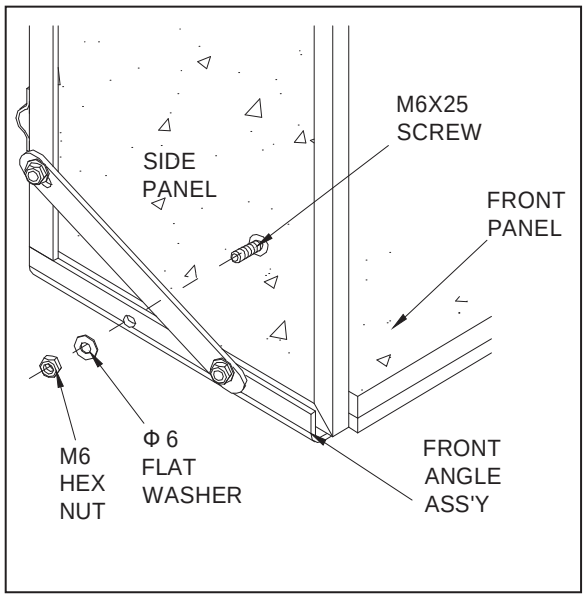

FIGURE 8

15. Lay the cart down on the floor so that the sides are in an upright position. Remove the front panel by sliding it up, then remove the four large washers you used for shims. See figure 9.

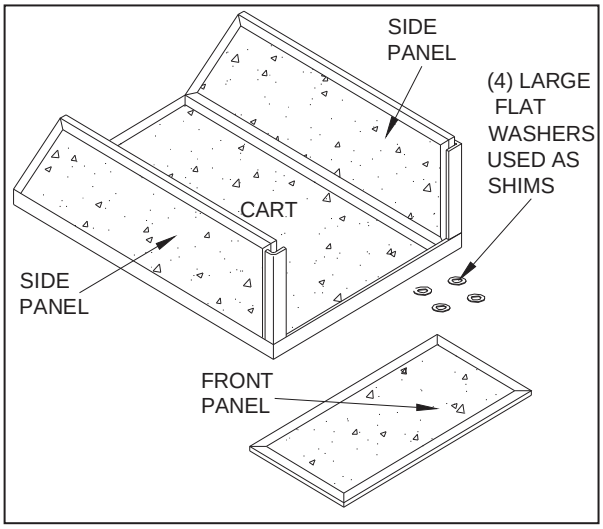

FIGURE 9

16. Stand cart up on its front end again. Place tube caps on leg tube and assemble the leg tube as shown in figure 10, using four M6X50 screws through side panels and leg tube. Secure with flat washers and hex nuts. See figure 10.

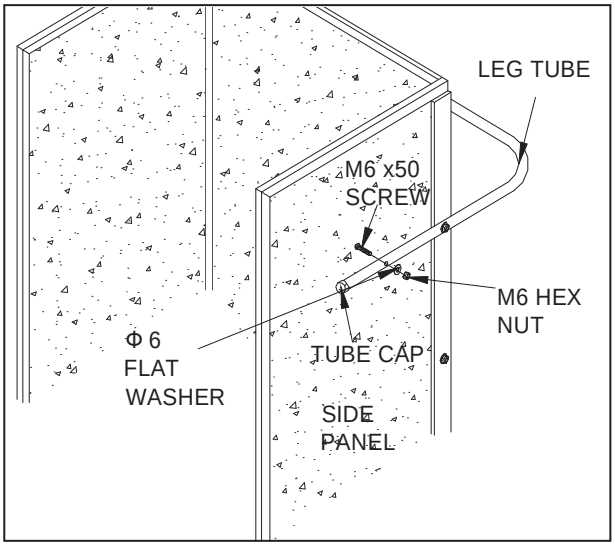

FIGURE 10

17. Leave the cart standing to assemble the handle tube in the next step.

18. Place tube caps on the handle tube, then place it over the side panels and line up the four holes. Assemble four M6X50 screws through the side panels and handle. Secure with flat washers and hex nuts. See figure 11.

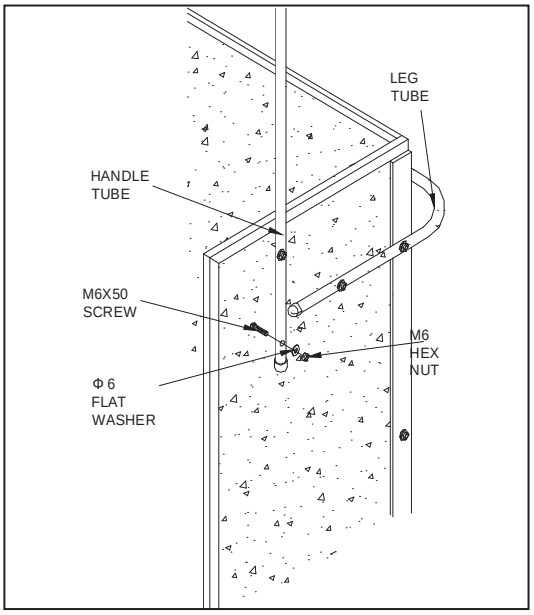

FIGURE 11

19. Lay the cart upside down. Slide the axle through the axle clamps. See figure 12.

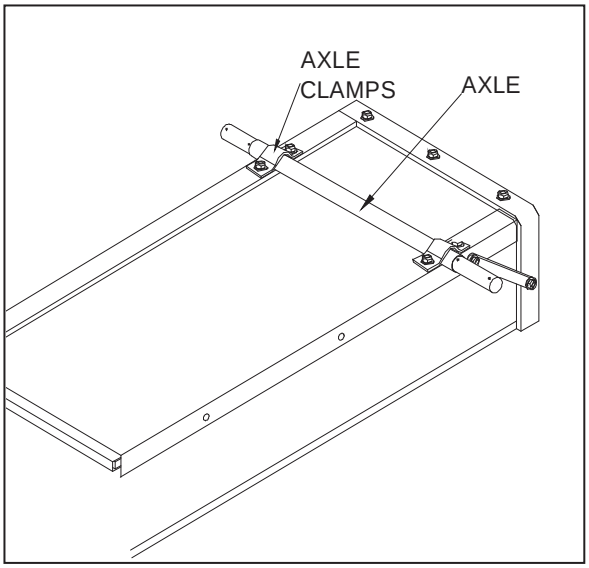

FIGURE 12

20. Assemble a cotter pin to the inside hole at one end of the axle. Place a large flat washer, a wheel and then another large flat washer onto the axle. Secure the wheel with a cotter pin assembled to the outside hole at the end of the axle. Repeat step for other wheel. See figure 12.
21. Center the wheels and the axle side to side. Tighten the four nuts on the axle clamps.

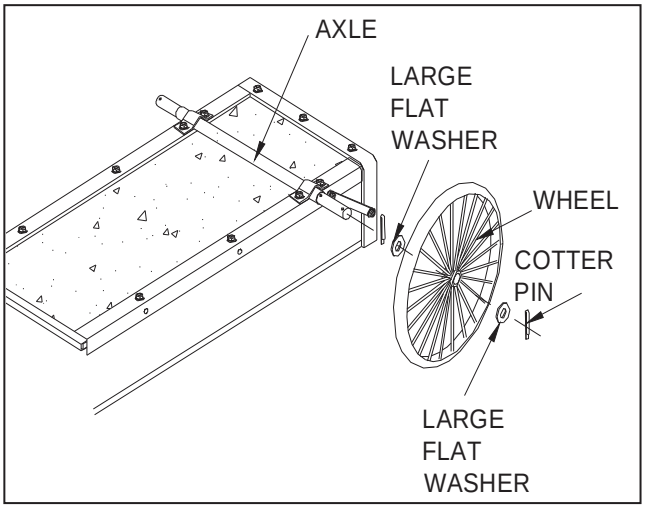

FIGURE 13

22. Turn cart right side up, so that it rests on its wheels.

23. Place front panel in guides to complete assembly.

24. Your cart is now ready to use.

MAINTENANCE

1. Grease or oil wheel bearings occasionally. Use automotive wheel bearing type grease or 20 weight oil.

2. Periodically retighten all screws, especially after heavy use. **Do not exceed load capacity rating of 300 lbs.**

3. Clean cart after each use.

4. Store indoors to avoid moisture and weathering.

5. Apply a light coat of varnish to all wood surfaces annually.

6. Use glossy black enamel spray paint to touch up scratched or worn painted metal surfaces.

RECOMMENDED TIRE PRESSURE 45-50 PSI
MAXIMUM TIRE PRESSURE 50 PSI (350KPa)

REF. NO.	Part NO	QTY.	DESCRIPTION	REF. NO.	Part NO	QTY.	DESCRIPTION
1	12108	1	Front Panel	12	NB708	4	Cotter Pin, Φ3
2	12109	2	Side Panel	13	12118	4	Flat Washer, Large
3	12110	1	Bottom Panel	14	12119	8	M6X50 Screw,
4	12111	1	Side Angle, L.H.	15	12120	15	M6X25 Screw,
5	12112	1	Side Angle, R.H.	16	12121	23	Flat Washer,Φ6
6	12113	1	Front Angle	17	NB725	27	Hex Nut, M6
7	12114	1	Handle Tube	18	12122	1	Axle
8	12115	1	Leg Tube	19	12123	4	Bearing, Ball Φ20
9	12116	2	Support Strap	20	12124	4	M6X30 Screw,
10	12117	2	Wheel Assembly Complete	21	12125	4	Lock Washer,Φ6
			w/Bearings(20")	22	12126	2	Axle Clamp
11	12104	4	Tube Caps			1	Owner's Manual

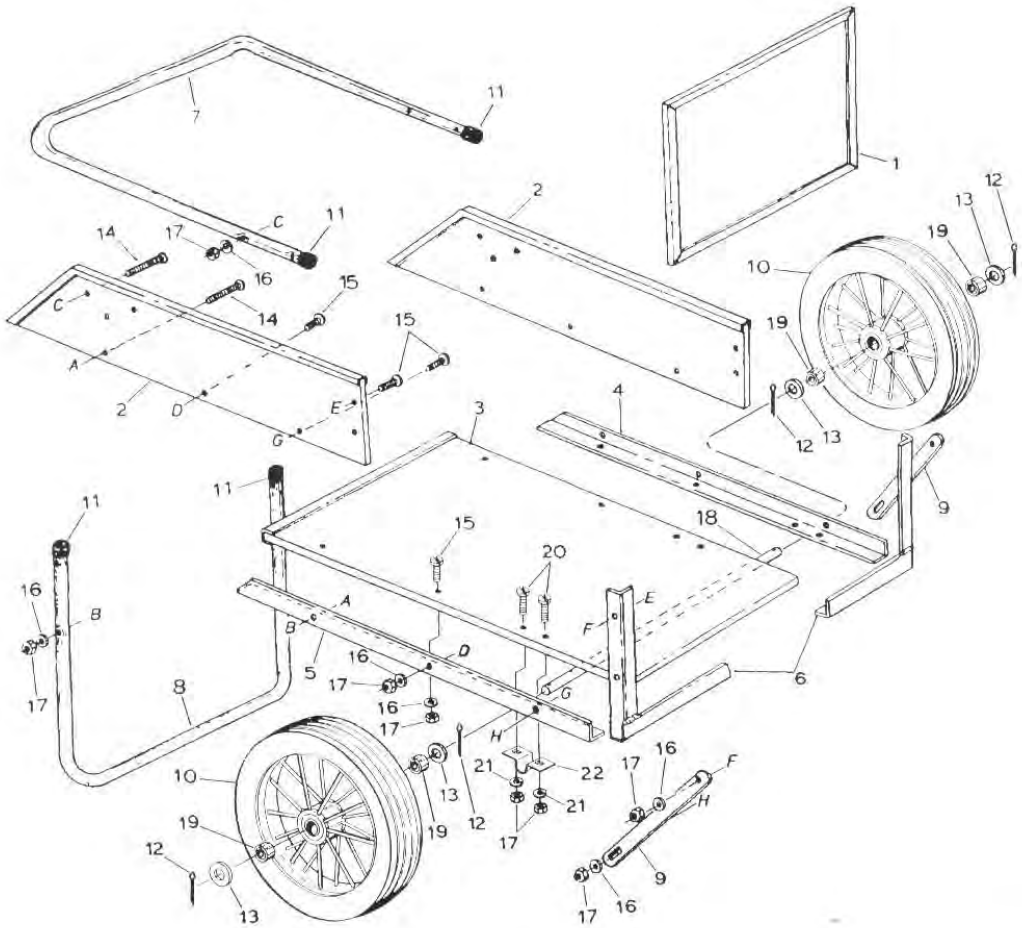

MANUFACTURING QUALITY LAWN CARE EQUIPMENT SINCE 1945

Owner's Manual

ATV & LAWN ACCESSORIES

GC-07

IMPORTANT
Read and follow all Safety Precautions and Instructions Before Operating this Equipment.

WHEN ORDERING PARTS, PLEASE HAVE THE FOLLOWING INORMATION AVAILABLE:

* PRODUCT – _____
* SERIAL NUMBER - _____
* MODEL NUMBER - _____
TYPE - _____
* PART NUMBER WITH PAINT CODE
* PART DESCRIPTION

TELEPHONE - 1-800-222-8183
FAX - 1-660-747-8650

SWISHER MOWER & MACHINE CO. INC.
1602 CORPORATE DRIVE
P.O. BOX 67
WARRENSBURG, MO 64093

swisherinc.com