MANUFACTURING QUALITY LAWN CARE EQUIPMENT SINCE 1945

swisherinc.com

OWNER'S MANUAL

MODEL NO.

12019

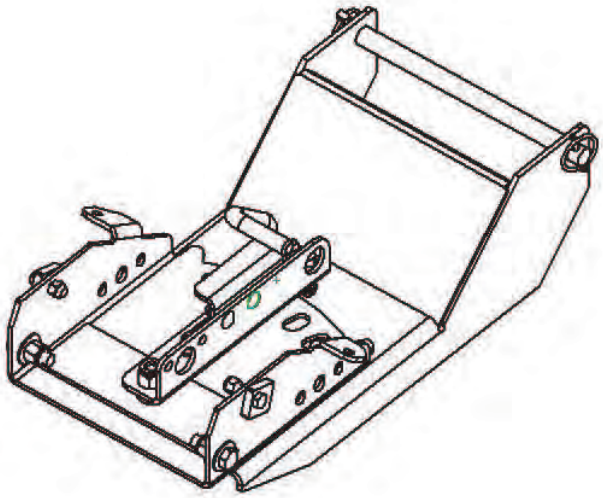

Blade Mount Kit

Safety
Assembly
Operation
Service and Adjustment
Repair Parts

IMPORTANT

Read and follow all Safety Precautions and Instructions before operating this equipment.

Rev.

1602 CORPORATE DRIVE, WARRENSBURG, MISSOURI 64093 PHONE 660-747-8183
FAX 660-747-8650

Manufacturing quality lawn care equipment since 1945

Made In The ***USA***

12026

LIMITED WARRANTY

The manufacturer's warranty to the original consumer purchaser is: This product is free from defects in materials and workmanship for a period of XXX (X) year from the date of purchase by the original consumer purchaser. We will repair or replace, at our discretion, parts found to be defective due to materials or workmanship. This warranty is subject to the following limitations and exclusions:

1)	Engine Warranty	All engines utilized on our products have a separate warranty extended to them by the individual engine manufacturer. Any engine service difficulty is the responsibility of the engine manufacturer and in no way is Swisher Mower Co., Inc. or its agents responsible for the engine warranty. The Briggs & Stratton Engine Service Hot-Line is 1-800-233-3723. The Tecumseh Engine Service Hot-Line is 1-800-558-5402.
2)	Commercial Use	No Commercial Use is Permitted with this product.
3)	Limitation	This warranty applies only to products which have been properly assembled, adjusted, and operated in accordance with the instructions contained within this manual. This warranty does not apply to any product of Swisher Mower Co., Inc., that has been subject to alteration, misuse, abuse, improper assembly or installation, shipping damage, or to normal wear of product.
4)	Exclusions	Excluded from this warranty are normal wear, normal adjustments, and normal maintenance.

In the event you have a claim under this warranty, you must return the product to an authorized service dealer. All transportation charges, damage, or loss incurred during transportation of parts submitted for replacement or repair under this warranty shall be borne by the purchaser. Should you have any questions concerning this warranty, please contact us toll-free at 1-800-222-8183. The model number, serial number, date of purchase, and the name of the authorized Swisher dealer from whom you purchased the splitter will be needed before any warranty claim can be processed.

THIS WARRANTY DOES NOT APPLY TO ANY INCIDENTAL OR CONSEQUENTIAL DAMAGES AND ANY IMPLIED WARRANTIES ARE LIMITED TO THE SAME TIME PERIODS STATED HEREIN FOR ALL EXPRESSED WARRANTIES. Some states do not allow the limitation of consequential damages or limitations on how long an implied warranty may last, so the above limitations or exclusions may not apply to you. This warranty gives you specific legal rights and you may have other rights, which vary from state-to-state. This is a limited warranty as defined by the Magnuson-Moss Act of 1975.

TABLE OF CONTENTS

WARRANTY……...….2
SAFETY..……. 3
ASSEMBLY..……..……4 & 5
PARTS BREAKDOWN…….6

SAFETY PRECAUTIONS

This Safety Alert Symbol indicates important messages in this manual. When you see this symbol, carefully read the message that follows and be alert to the possibility of personal injury.

Read this manual completely. Failure to observe the following safety instructions could result in serious injury or death.

- Read the manual. Learn to operate this machine safely.
- Keep the operating speed LOW!!!!!
- Allow only responsible adults who are familiar with these instructions to operate this machine. Never allow children to operate this machine.
- Be sure the area is clear of other people before operating. Children are often attracted to the machine and the operating activity. ***Never assume that children will remain where you last saw them.*** Keep children under the watchful care of another responsible adult.
- Watch for traffic when operating near or crossing roadways.
- Do not operate the attachment if it has been dropped or damaged in any manner. Repair as necessary.
- Dress properly. Do not operate when barefoot or wearing open sandals.
- Do not operate the machine while under the influence of alcohol or drugs.
- Never tamper with safety devices. Check their proper operation regularly.

Assembly Instructions

Unpack carton and identify parts.

Note: Some of the parts have been loosely assembled for shipping. Please note the sequence of the assembly

1. Place the Hinge plate on the Push Plate aligning the 5/8 inch hole in the Push plate with the 1 inch hole in the hinge plate.
2. Remove the nuts from the 5/8 inch and 3/8 inch bolts installed into the Latch Assembly. Note the order of the loose parts as they will need to be reinstalled back in the same order.
3. Install Bushing 7842Z into the 1 inch diameter hole. Take the 5/8 inch Carriage bolt removed from the Latch Assembly and install it from the bottom of the Push Plate as shown. Be sure that the Washer 10161 is installed on the Carriage bolt.
4. Place the two 3/8 Carriage bolt from the rear of the Latch Assembly, up through the plate and install the 3/8 spacers over the bolts.
5. Place the Latch assembly onto the bolts installed into the plate and tighten.
6. Check that the hinge plate is free to rotate, and the latch fits into all holes of the Hinge Plate

We are now ready to install the Blade Kit to the plate

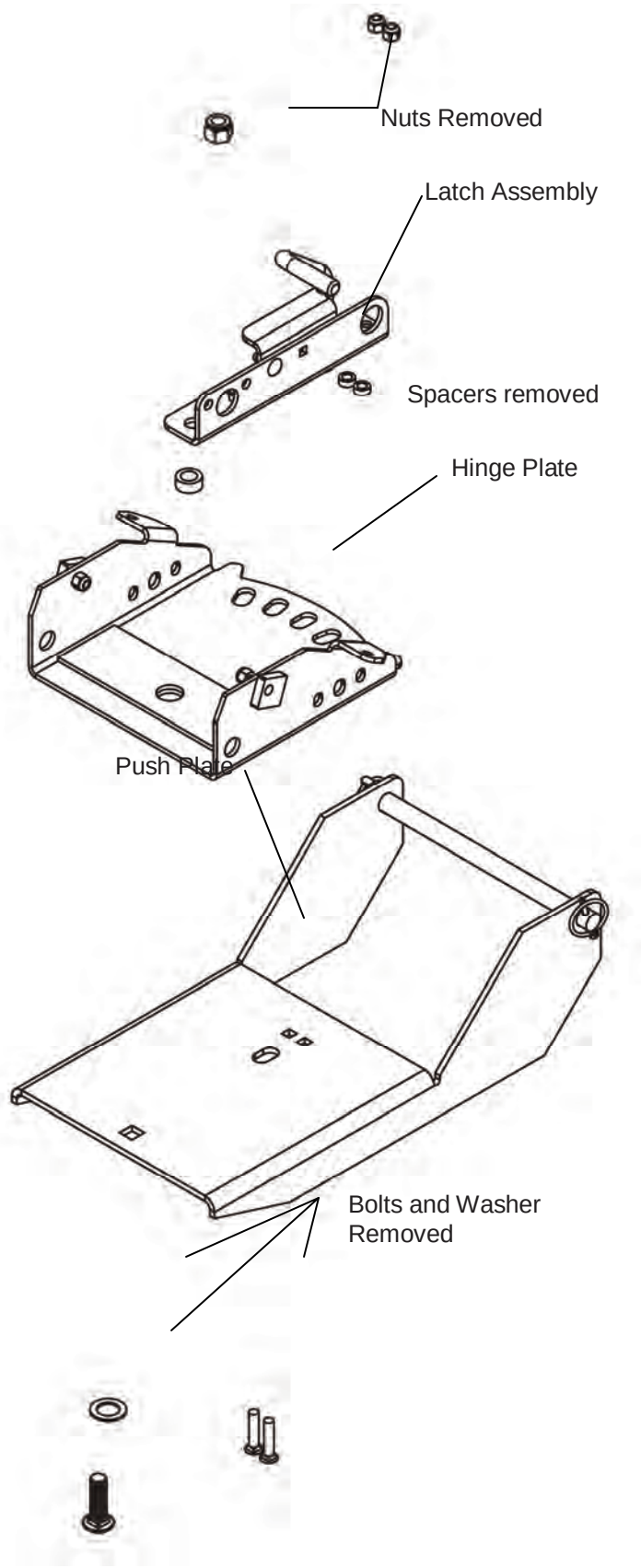

Assembly of Blade to Push Frame

Get the ½ X 1 1/2 inch Bolts, Washers, Nuts, and Spacers from the hardware bag.

Place the push frame assembly against the blade assembly aligning holes A and B. Insert the Spacer into the Hole in the Hinge Plate and place the bolt through the assembly with a Washer on each side as shown. Attach the Nut and hand tighten. Repeat this step on the other side. After the hardware is assembled, tighten both bolts. Rotate the blade forward to assure that the blade will pivot freely.

Install one loop of the Tilt Springs into the tab on the Hinge plate and on the other end place the Eye Bolt. The end of the Eye Bolt goes through the hole in the upper support plate at the back of the Blade Frame. Tighten the nut until the spring coils begin to spread apart. Repeat on the other side.

Note: If the Blade flips over too easily, you may want to increase the tension by tightening the Eye Bolt Nuts additional turns. Use caution as this is a safety feature to reduce the stress on the bike by allowing the blade to cam over an immovable object.

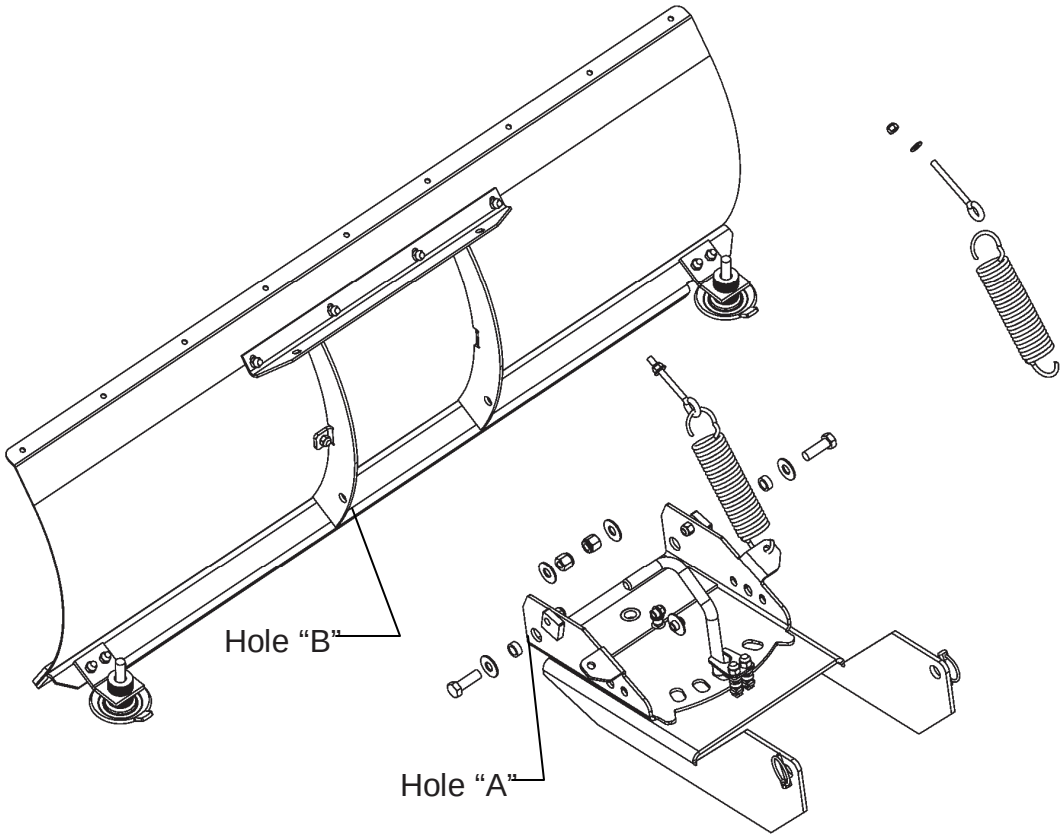

Parts List

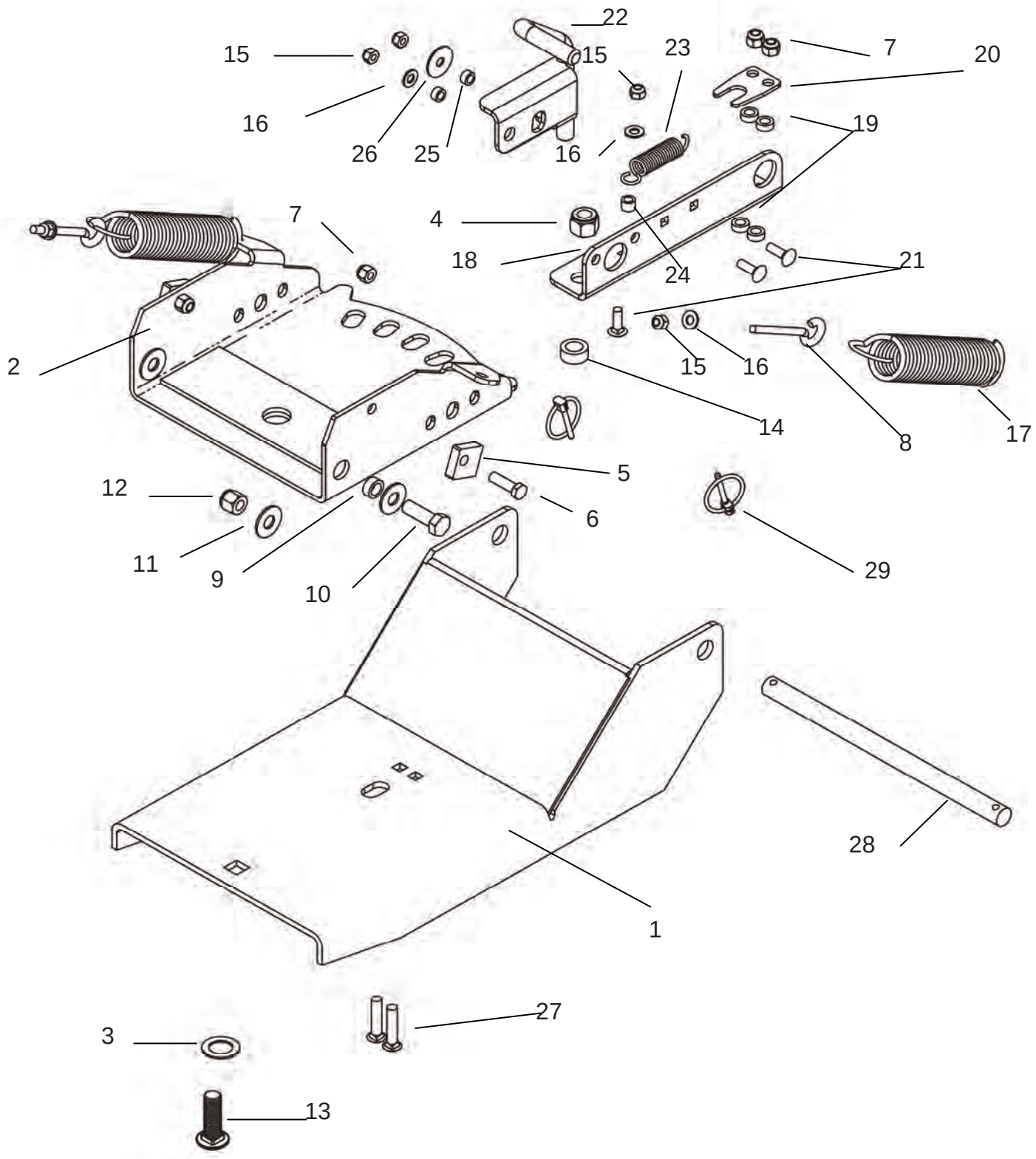
22
15
15
23
7
20
16
26
25
16
19
7
4
18
24
21
2
15
16
14
8
17
5
12
6
11
9
10
29
28
1
27
3
13

Parts List

Item	Part No.	Description	Item	Part No.	Description
1	12404TK	Push Plate Painted	16	NB275	Washer 5/16
2	12407TK	Hinge Plate Painted	17	7823	Blade Spring
3	10161	Washer	18	7817	Latch Angle Bracket
4	NB561	5/8-11 Nylock Nut	19	7840Z	Guide Pin Bushing
5	7843Z	Stop Block	20	7814Z	Pin Guide
6	NB618	Bolt 3/8 -16 X 1 1/4	21	10197	5/16-18 X 1 Carriage Bolt
7	NB182	Nylock Nut 3/8-16	22	7812Z	Latch Pin Weldment
8	NB315	Bolt -Eye	23	7821	Latch Spring
9	7841Z	Bellcrank Bushing	24	7825Z	Lift Bar Bushing
10	NB617	1/2-13 X 1 1/2 Bolt	25	7839Z	Bushing Latch Pin
11	NB555	1/2 USS Washer	26	NB579	Washer Fender
12	NB281	Nylock Nut 1/2-13	27	10502	3/8-16 X 1 3/4 Carriage Bolt
13	10504	5/8-11 X 2 Carriage Bolt	28	2642TK	Plow Mount Pin
14	7842Z	Hinge Bushing	29	NB506	3/16 Click Pin
15	NB181	Nylock Nut 5/16-18	30		

Notes:

MANUFACTURING QUALITY LAWN CARE EQUIPMENT SINCE 1945

Owner's Manual

Model Numbers

12019
Push Frame Kit

IMPORTANT
Read and follow all Safety Precautions and Instructions Before Operating this Equipment.

ATV ACCESSORIES

WHEN ORDERING PARTS, PLEASE HAVE THE FOLLOWING INORMATION AVAILABLE:

* PRODUCT – _____
* SERIAL NUMBER - _____
* MODEL NUMBER - _____
TYPE - _____
* PART NUMBER WITH PAINT CODE
* PART DESCRIPTION

TELEPHONE - 1-800-222-8183
FAX - 1-660-747-8650

SWISHER MOWER & MACHINE CO. INC.
1602 CORPORATE DRIVE
P.O. BOX 67
WARRENSBURG, MO 64093

swisherinc.com