swisherinc.com

INSTRUCTION MANUAL FOR

12376

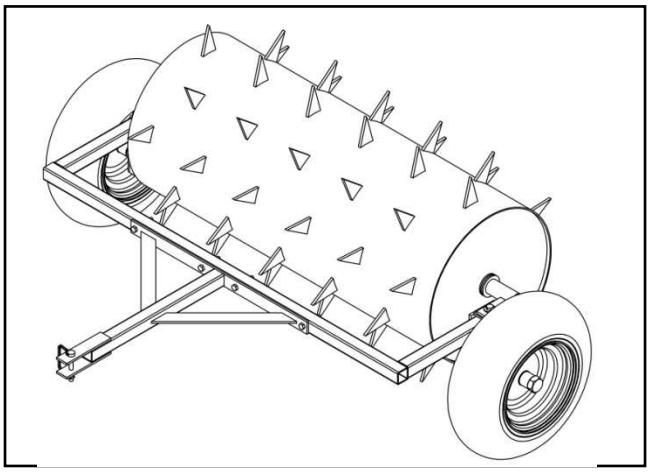

Wheel Kit, Drum Spike Aerator

IMPORTANT

Read and follow all Safety Precautions and Instructions before operating this equipment.

12705 rev 07-254

Assembly
Operation
Service and Adjustment
Repair Parts

1602 CORPORATE DRIVE, P.O. BOX 67, WARRENSBURG, MISSOURI 64093
PHONE 660-747-8183 FAX 660-747-8650

Made In CHINA

Manufacturing quality lawn care equipment since 1945

Note: Wheel Kit is for use with weight of Spike Drum only. Using wheel kit with water in drum will exceed the weight limit and could cause failure of the wheel kit.

Step 1

Remove existing bolts and nuts from Roller/Aerator. Then remove tow bar. Save hardware for future use when wheel kit is not desired.

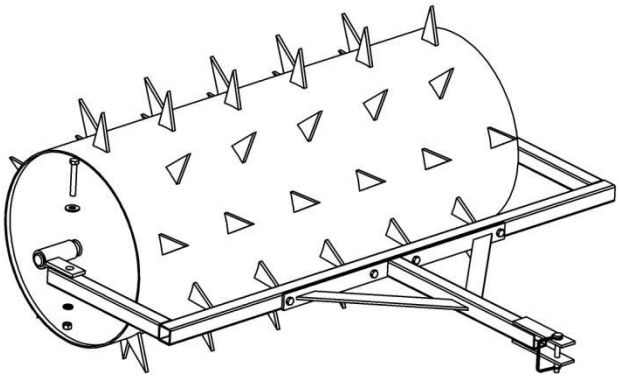

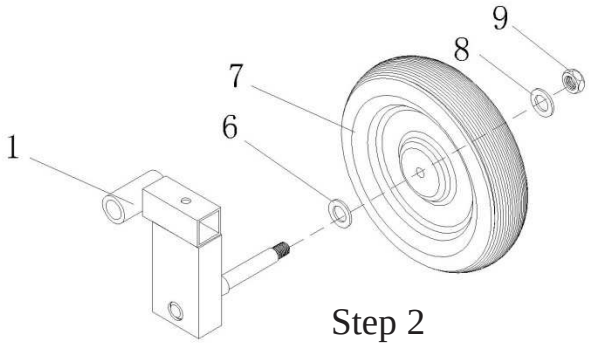

Step 2

Step 2

To assemble wheel kit, place washer(Part 6), wheel(Part 7), washer(Part 8), then nut (Part9) on part 1, in order, as shown in picture (Step 2).

Step 3

(Repeat for each side)
Slide the tow bar into the Wheel Kit Weldment (1).
Line the holes in the tow bar with the holes in the wheel kit weldment, placing the mounting bracket on top of the weldment.
Using the hardware shown, place the bolt through the three pieces and tighten securely.

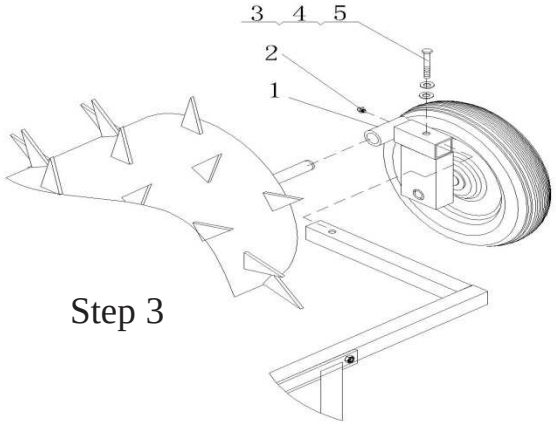

Step 3

To use your new wheel kit; simply rotate the wheel kit assembly/tow bar 180 degrees to lift the aerator off the ground and transport as necessary.

Drum Wheel Kit with 16" Tire

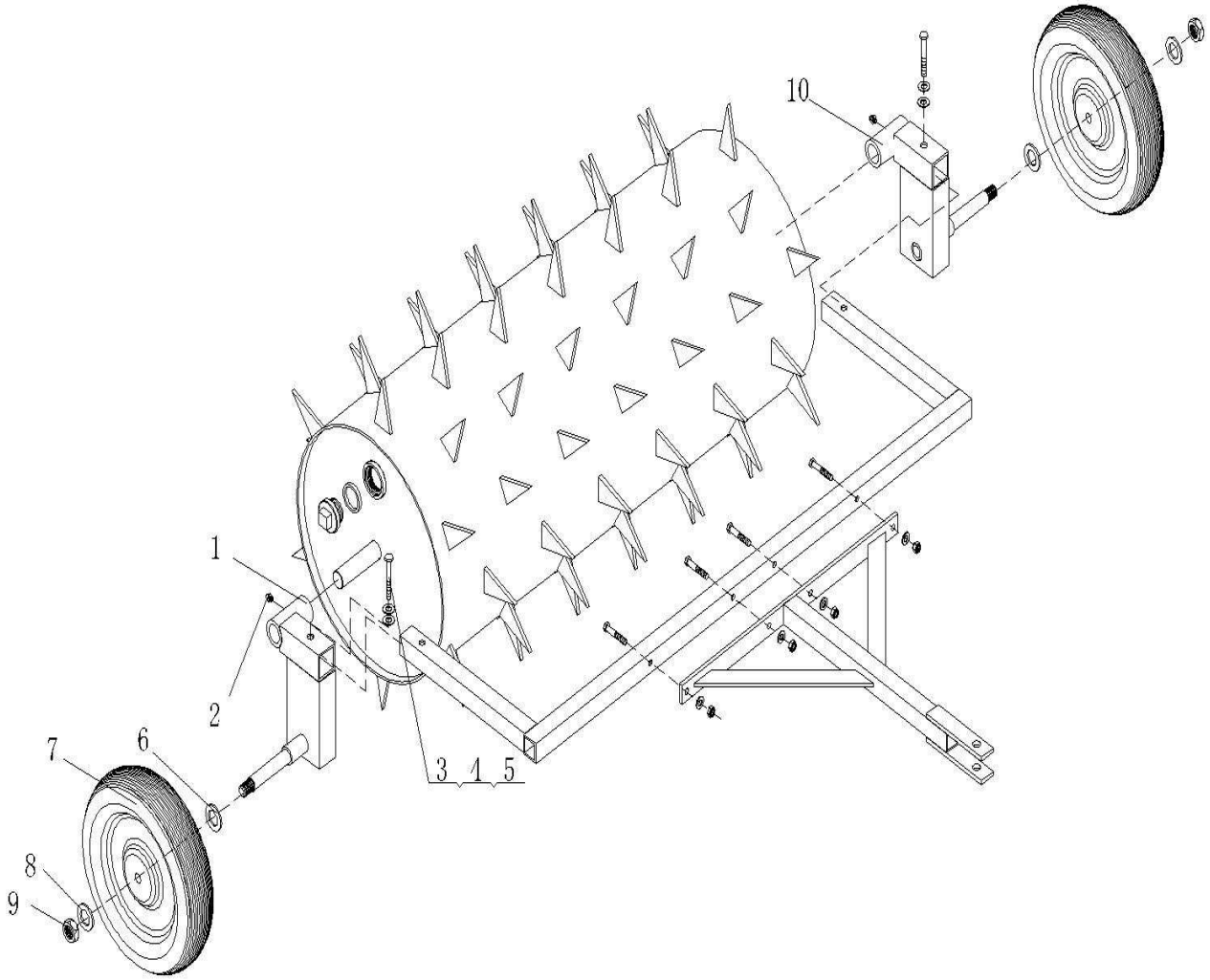

PARTS LIST (Wheel kit only)

REF#	PART # DESC	QTY	REF#	PART # DESC	QTY
1	14302 Bracket - Wheel, Left	1	6	14303 Washer - Flat M20	2
2	NB662 Zerk - Grease, 1/4	2	7	14304 Tire - Pneumatic	2
3	NB630 Bolt - Hex, M10 X 1.5 X 60 GR8 ZP	2	8	14305 Washer - Flat, M16	2
4	NB272Washer - SAE Flat 3/8 ZY Crbn Stl	2	9	14306 Lock Nut - M16	2
5	NB272Washer - SAE Flat 3/8 ZY Crbn Stl	2	10	14307 Bracket - Wheel, Right	1