swisherinc.com

OWNER'S MANUAL

STARTING SERIAL #:
L106-001001

MODEL NO. LV87537

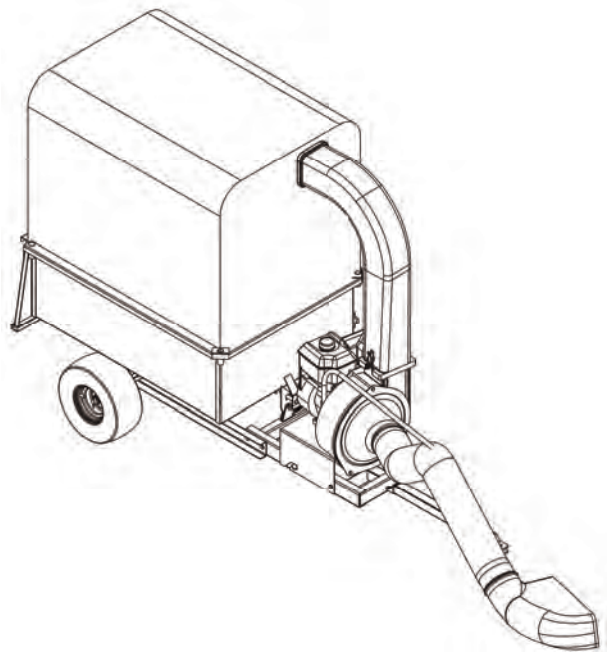

LAWN VACUUM

Wand Adaptor Kit sold separately. Part Number 5473

IMPORTANT

Read and follow all Safety Precautions and Instructions before operating this equipment.

Rev. 06-289

Assembly
Operation
Service and Adjustment
Repair Parts

1602 CORPORATE DRIVE, WARRENSBURG, MISSOURI 64093 PHONE 660-747-8183
FAX 660-747-8650

Manufacturing quality lawn care equipment since 1945

Made In The USA

12945

LIMITED WARRANTY

The manufacturer's warranty to the original consumer purchaser is: This product is free from defects in materials and workmanship for a period of one (1) year from the date of purchase by the original consumer purchaser. We will repair or replace, at our discretion, parts found to be defective due to materials or workmanship. This warranty is subject to the following limitations and exclusions:

1) Engine Warranty	All engines utilized on our products have a separate warranty extended to them by the individual engine manufacturer. Any engine service difficulty is the responsibility of the engine manufacturer and in no way is Swisher Mower Co., Inc. or its agents responsible for the engine warranty. The Briggs & Stratton Engine Service Hot-Line is 1-800-233-3723. The Tecumseh Engine Service Hot-Line is 1-800-558-5402.
2) Commercial Use	The warranty period for any product used for commercial or rental is limited to ninety (90) days from the date of original purchase.
3) Limitations	This warranty applies only to products which have been properly assembled, adjusted, and operated in accordance with the instructions contained within this manual. This warranty does not apply to any product of Swisher Mower Co., Inc., that has been subject to alteration, misuse, abuse, improper assembly or installation, shipping damage, or to normal wear of the product.
4) Exclusions	Excluded from this warranty are normal wear, normal adjustments, and normal maintenance.

In the event you have a claim under this warranty, you must return the product to an authorized service dealer. All transportation charges, damage, or loss incurred during transportation of parts submitted for replacement or repair under this warranty shall be borne by the purchaser. Should you have any questions concerning this warranty, please contact us toll-free at 1-800-222-8183. The model number, serial number, date of purchase, and the name of the authorized Swisher dealer from whom you purchased the mower will be needed before any warranty claim can be processed.

THIS WARRANTY DOES NOT APPLY TO ANY INCIDENTAL OR CONSEQUENTIAL DAMAGES AND ANY IMPLIED WARRANTIES ARE LIMITED TO THE SAME TIME PERIODS STATED HEREIN FOR ALL EXPRESSED WARRANTIES. Some states do not allow the limitation of consequential damages or limitations on how long an implied warranty may last, so the above limitations or exclusions may not apply to you. This warranty gives you specific legal rights and you may have other rights, which vary from state-to-state. This is a limited warranty as defined by the Magnuson-Moss Act of 1975.

Please fill in the serial numbers and model numbers for both the engine and the lawn vacuum on the back of this manual.

SAFETY PRECAUTIONS

This Safety Alert Symbol indicates important messages in this manual. When you see this symbol, carefully read the message that follows and be alert to the possibility of personal injury.

Read this manual completely. This machine can amputate hands, feet, and throw objects. Failure to observe the following safety instructions could result in serious injury or death.

WARNING: The engine exhaust from this product contains chemicals known to the state of California to cause cancer, birth defects or other reproductive harm.

DANGER: Your lawn vacuum is intended to be operated according to the rules for safe operation in this manual. As with any type of power equipment, carelessness or error on the part of the operator can result in serious injury. If you violate any of these rules, you may cause serious injury to yourself or others.

- Read the manual. Learn to operate this equipment in a safe manner.
- Do not under any circumstances alter this lawn vacuum. This equipment was designed and engineered in accordance with operating instructions. Altering this equipment, or using this equipment in such a way as to circumvent its design capabilities and capacities, could result in serious injury or fatality and WILL VOID THE WARRANTY.
- Allow only responsible adults who have read this manual to operate this machine. Never allow children to operate this machine.
- Inspect turf for any rocks, string, toys, wire, etc. that may cause an obstruction; and remove them.
- Identify all in-ground objects that will need to be avoided, such as, sprinkler heads, stakes, water valves, etc.
- Stop the engine if you pick up a foreign object and after all moving parts have stopped; inspect the vacuum for any damage.
- Use the proper boot for your mower deck.
- Only use vacuum for turf collection.
- When crossing gravel areas, stop the vacuum and mower blades.
- Only a single operator is to operate the lawn vacuum. Keep all others, including pets and children, a minimum of 20 feet away from your work area.
- Always disconnect the spark plug wires and place them where they cannot contact the spark plug, to prevent accidental starting the engine when setting up, transporting, adjusting or repairing.
- Always wear protective gear such as safety goggles, protective hearing device.
- Never wear loose clothing or jewelry that can be caught by moving parts of the vacuum and pull you into it. Keep hair away from moving parts. There are rotating blades inside these opening.

- Familiarize yourself with all of the controls in a safe environment before starting to work with this machine.
- Keep hands and feet away from moving parts.
- Only operate vacuum on slopes of 35% grade or less.
- Never operate or allow someone to operate this equipment while under the influence of alcohol or drugs.
- Never make adjustments or repairs with the engine running.
- Do not remove top cover or attempt to empty contents or make any adjustments of cart while engine is running.
- Do not use lawn vacuum if any guards, hoses, adapters, boot or any other damage or repairs are needed.
- Vehicle braking and stability are affected by the addition of this equipment. Do not fill the lawn vacuum to its full capacity without checking the towing capacities of the tow vehicle.

SAFETY AND OPERATIONAL DECALS

Replace decal immediately if damaged. Order by part number from Swisher Mower and Machine Co. Inc.

OD70142-DANGER STOP ENGINE DECAL

OD55-TRIANGLE DANGER DECAL

OD38-CAUTIONS DECAL

ASSEMBLY INSTRUCTIONS

1. Remove outside crate and set parts aside.
2. Remove small components and identify each piece.
3. Raise front hitch, using caution to prevent latch from being bent. (Figure 1)
4. Latch hitch to wagon.
5. Align holes in frame and install 3/8-16X1” Hex Head bolt and lock nuts.
6. Tighten all four of the hitch bolts securely. (Figure 2)
7. Insert hitch tube into the front of the hitch and lock in place with the snap pin (H11).
8. Lower trailer down on the wheels and roll off of the pallet.
9. Align fan/engine/pump assembly on lower slots of motor base with the rivets, pushing down and rearward to align the front holes. (Figure 3)
10. Install 3/8-16X1” bolts in front holes and tighten.
11. Unfold fabric bag frame and place into pockets at the corner of the bed. (Figure 5)
12. Install tailgate by sliding downward into the rear channels.
13. Open fabric bag and spread over the top frame stretching downward and slipping the plastic edge under the edge of the trailer bed rail.
14. Attach the Velcro tabs around the rear frame section and zip the rear flap closed.
15. Insert the bag adaptor into the bag sleeve at the front upper left hand corner
16. Install upper tube onto blower and lock into place.
17. Install hose onto the front of the blower housing and secure clamp.
18. Cut boot to fit deck and install to deck. (Figure 4)
19. Assemble end of hose and a hose clamp over the round opening of boot and tighten clamp.

PREPARING THE DECK BOOT

- View the boot templates that are provided. Select the template that corresponds with the discharge opening of mowing deck. If a template does not exist for your mower, then one will need to be created.
- To create a custom template, mark around your discharge opening on a piece of cardboard.
- Tape the template to the face of the boot, locating the template approximately ½” from the front edge and ¼” down from the top. Keep as close to the top as possible. Mark outline of template onto the face of the boot using a white crayon, nail or scribe.
- Drill a starting hole inside the outline, and then use a key-hole saw or equivalent to cut out the opening. Be sure not to cut the hole too big the first time.
- Position the boot over the deck opening and check for fit of cutout. If necessary, trim cutout. Keep the fit as close as possible for best vacuum suction.
- A selection of boot brackets is provided. Some bending may be required. Drilling of holes into your existing deck may be necessary, as well as drilling into the top of the boot.

ATTENTION!
WE HAVE MADE EVERY ATTEMPT TO PROVIDE HARDWARE TO MOUNT THE DECK BOOT TO VARIOUS LAWN MOWING MANUFACTURERS. DUE TO CONSTANT CHANGES IN DESIGNS OF MOWING DECKS SOME ADAPTATION MAY BE NECESSARY.

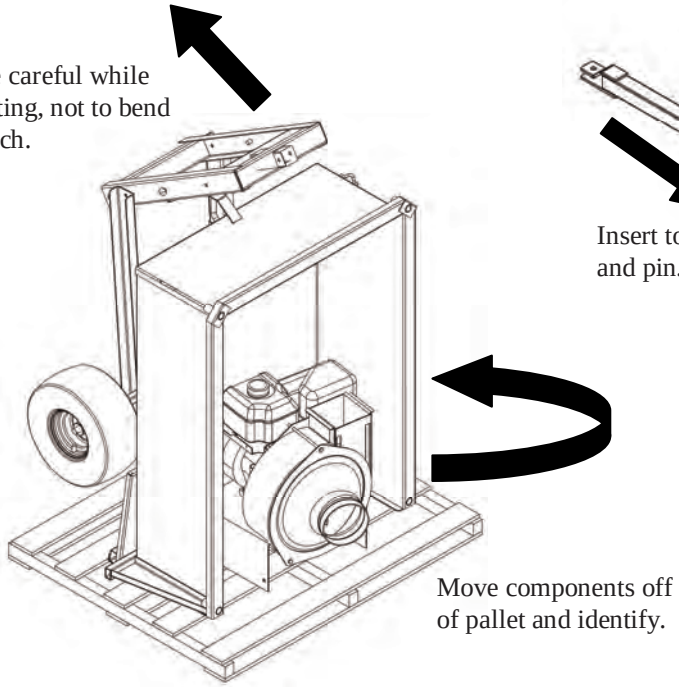

Figure 1

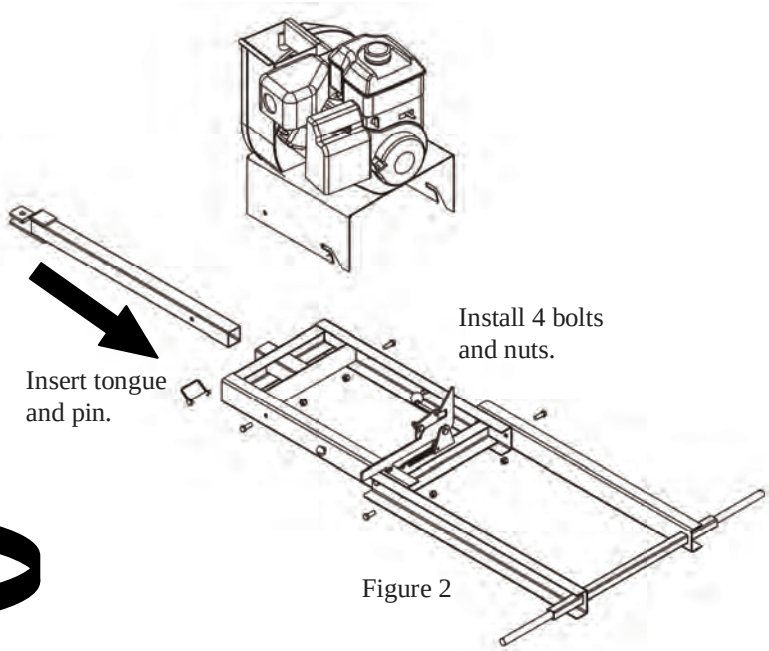

Figure 2

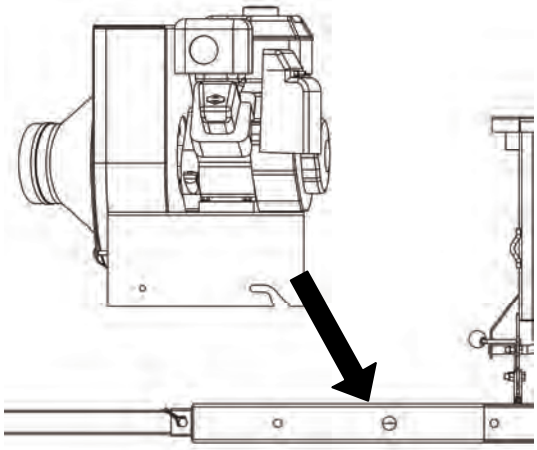

Figure 3

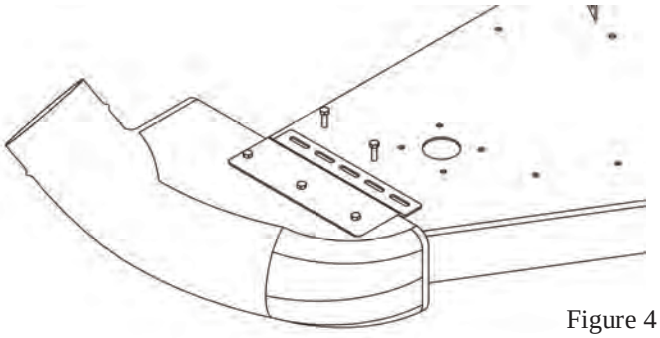

Figure 4

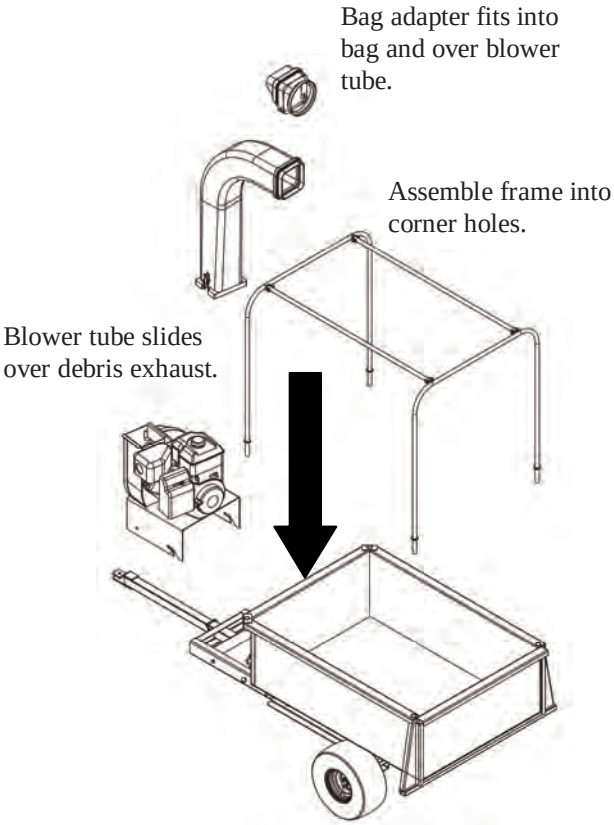

Figure 5

OPERATING YOUR LAWN VACUUM

The operation of any mower can produce foreign objects to be thrown into the eyes, resulting in severe eye damage. Always wear certified safety glasses or wide-vision safety goggles over spectacles before starting any cutting machine and while operating such a machine.

The operation of any engine produces sound waves that are damaging to the human ear. Ear protection is recommended.

CAUTION!
Tragic accidents can occur if the operator is not alert to the presence of children. Children are often attracted to the machine and the mowing activity. ***Never assume that children will remain where you last saw them.***

INTENDED USE

The Lawn Vacuum is designed to vacuum grass clippings and leaves from yards. It is not intended to vacuum over gravel, sand, rock, etc., or any other material that will damage the impeller blades. The Lawn Vacuum is not designed to exceed 5 MPH. It should be towed by an approved lawn tractor only. It is not designed to tow behind our patented Trail Mowers.

TO START ENGINE

See engine manufacturer's recommendations for the type and amount of oil and fuel used.

- Make sure the tow vehicle parking brake is set and vacuum is level. Engine must be level to accurately check and fill oil. **Do not overfill.**
- Check spark plug wire, oil, and fuel.
- Set engine idle to CHOKE position.
- Grasp pull-rope handle and pull out slowly until engine reaches start of compression cycle. Pull the rope with a single fluid motion. Let the rope recoil slowly. Repeat instruction 4 or 5 times until engine fires.
- Once engine is running, move CHOKE control to RUN position.

TO STOP ENGINE

- Move the throttle control lever to the OFF position.
- Disconnect spark plug wire from plug to prevent accidental starting while equipment is unattended or is being worked on.

VACUUM AND EMPTY

- Inspect the Lawn Vacuum to make sure all covers, tailgate, deck adapter, elbow, hose adapter, and hose are properly attached.
- Check tires for proper inflation.
- Check oil and gas in vacuum and lawn tractor engines.
- Begin operation at low speed, adjust forward speed to match grass height and/or moisture condition to prevent clogging. Should your Lawn Vacuum become clogged, shut off tractor and vacuum engines. Before attempting to unclog, remove spark plug wire to prevent accidental starting.
- To empty cart, shut off tractor engine and set brake.
- Shut off Lawn Vacuum engine.
- Unzip the fabric cover and remove the tailgate. Unhooking the fabric from the sides and front of the cart is not necessary.
- Release the latch holding the cart to the tongue by lifting up on the handle.
- Unhook the plastic elbow from the fabric adapter attached to the fabric.
- Tilt the cart backwards.
- Using a rake or other suitable tool, pull the grass clippings from the cart.
- After cart is emptied, return cart to tongue and reattach plastic elbow to the boot. Put tailgate back on and attach fabric.

CAUTION!
VEHICLE BRAKING AND STABILITY MAY BE AFFECTED WITH THE ADDITION OF AN ACCESSORY OR AN ATTACHMENT. BE AWARE OF CHANGING CONDITIONS ON SLOPES. DO NOT OVER FILL CART.

TWO – IN – ONE APPLICATION

Your Swisher Lawn Vacuum has been designed to perform two capabilities in one product. While you are not using your Lawn Vacuum to sweep up leaves and grass clippings the engine assembly, fabric cover and upper frame may be disassembled to leave you with a utility trailer.

- Empty all fuel from engine.
- Remove engine assembly and the plastic elbow from tongue and store in a ventilated area.
- Remove bag by un-clipping it from the lip of the cart and releasing the Velcro straps from the frame. Shake out loose debris, fold and store in a dry area.
- Lift the frame out of the cart, fold and store with the fabric covering.

DANGER!
DO NOT USE THE LAWN VACUUM WITH JUST THE ENGINE AND THE BLOWER TUBE. THIS IS VERY DANGEROUS.

VACUUM MAINTENANCE

CAUTION!
ALWAYS STOP ENGINE AND DISCONNECT SPARK PLUG WIRE BEFORE MAKING ANY ADJUSTMENTS AND/OR REPAIRS.

- Replace the spark plug at the beginning of each mowing season.
- Keep the air cleaner free of debris.
- Change the oil after the first 5 hours of operation then change the oil every 25 hours of operation.
- Rotate hoses from end to end after every 25 hours of use and rotate each hose ¼ turn after every mowing season. This keeps debris from building up in one area.
- Regular cleaning and scheduled maintenance will prolong the life and performance of your Lawn Vacuum.
- Remove debris as it accumulates, paying special attention to the hoses.
- Replace or repair any damaged or worn parts immediately.
- Check the fabric covering periodically for any tears, rips or deterioration.
- Lubrication may be needed to keep the release latch functioning smoothly.

ATTENTION:
GRASS CATCHER COMPONENTS ARE SUBJECT TO WEAR, DAMAGE, AND DETERIORATION, WHICH COULD EXPOSE MOVING PARTS OR ALLOW OBJECTS TO BE THROWN. FREQUENTLY CHECK COMPONENTS AND REPLACE WITH SWISHER'S RECOMMENDED PARTS, WHEN NECESSARY.

STORAGE

- Clean the vacuum.
- Before storing be sure Lawn Vacuum is thoroughly dried, especially the fabric covering. Mildew can cause the fabric to deteriorate.
- Remove fuel from the gas tank.
- Change oil and air filters.
- Store vacuum in a dry covered area or indoors.

ONLY A QUALIFIED MECHANIC SHOULD MAKE ANY ADJUSTMENTS, DISASSEMBLY OR OTHER KINDS OF REPAIRS.

ASSEMBLY DETAIL

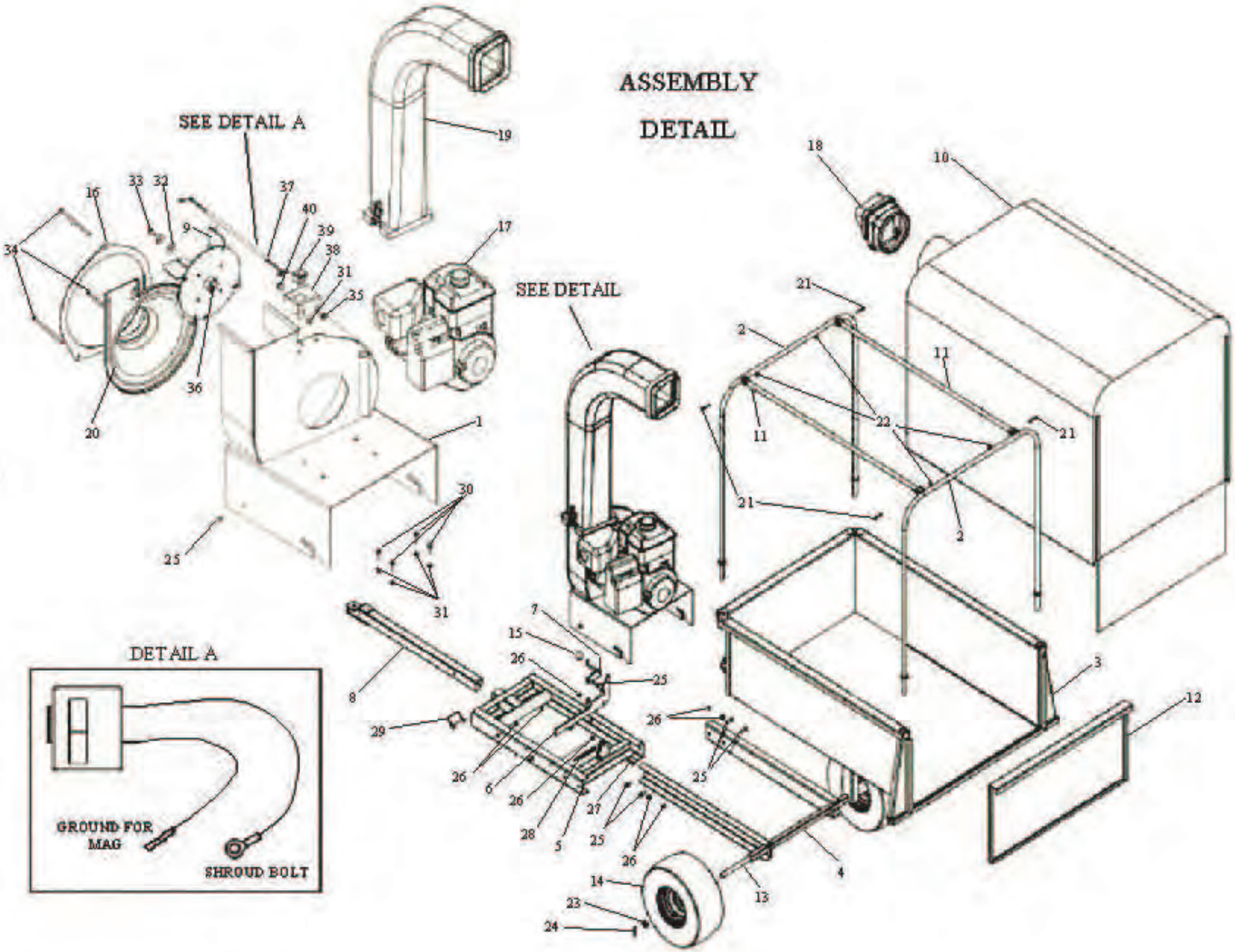

SERVICE PARTS

Please have Model and Serial Numbers ready when ordering parts.

Color cannot be guaranteed upon service parts.

ITEM NUMBER	DESCRIPTION	PART NUMBER
1	MOTORBASE	5443TK
2	BAG FRAME WELDMENT	5412TK
3	TRAILER	5400TC
4	REAR FRAME SECTION	5437TK
5	FRONT FRAME SECTION	5433TK
6	LATCH	5439TK
7	LATCH LOCK	5468TK
8	TONGUE	5421TK
9	IMPELLER	5426
10	BAG	5420NL
11	BAG FRAME SPREADER	5414TK
12	TAILGATE	5463TC
13	AXLE	5462
14	TIRES	F44157LV
15	KNOB	2079
16	FRONT RING	5410TK
17	ENGINE	N/A
18	BAG ADAPTOR	5407
19	TUBE - BLOWER ASSEMBLY	5470
20	BLOWER FRONT	5405
21	1/4 - 20 X 1 1/2 BOLT	NB162
22	1/4 - 20 NYLOK NUT	NB180
23	3/4ID X 1 1/4OD WASHER	NB195
24	1/8 X 1 1/2 COTTER PIN	NB126
25	3/8 - 16 X 1 BOLT	NB604
26	3/8 - 16 NYLOK NUT	NB182
27	3/8 - 16 X 1 1/4 BOLT	NB618
28	SPRING FOR IDLER ARM	BRS6
29	SAFETY HITCH PIN	H11
30	5/16 - 18 X 1 1/4 SERRATED FLANGE BOLT	NB253
31	5/16 - 18 SERRATED FLANGE NUT	NB170
32	BELLEVILLE WASHER	699
33	3/8 - 24 X 1 BOLT W/ LOCKTITE	NB238N
34	5/16 - 18 X 6 1/2 BOLT	NB680
35	5/16 - 18 NYLOK NUT	NB181
36	1/4 X 1 Key Stock	9031
37	WIRING HARNESS LAWN VAC	10784
38	PLATE SWITCH MOUNTING	5487TK
39	INTERLOCK SWITCH	10885
40	5/16-18 X 1/2 Serr. Flg Bolt	NB252
NOT SHOWN	HOSE	5402
NOT SHOWN	CLAMP	5403
NOT SHOWN	BOOT	5404
NOT SHOWN	SUSPENSION ARM	5467TK
NOT SHOWN	ADAPTOR PLATE	5471TK

OWNER'S MANUAL

MODEL NO. LV87537

LAWN VACUUM

HOW TO ORDER REPAIR PARTS:

Each Lawn Vacuum has its own serial number. Each engine has its own serial number. The serial number for the Lawn Vacuum will be found on the left hand side of the motorbase. The serial number for the engine will be found on the top of the blower fan housing.
All Lawn Vacuum parts listed herein may be ordered directly from Swisher Mower & Machine Co. Inc., your nearest Swisher dealer, or from our website. www.swisherinc.com
All engine parts may be ordered from the nearest dealer of the engine supplied with your mower.

WHEN ORDERING PARTS, PLEASE HAVE THE FOLLOWING INFORMATION AVAILABLE:

* PRODUCT – LAWN VACUUM
* SERIAL NUMBER - _____
* MODEL NUMBER - _____
* ENGINE MODEL NUMBER - _____
  TYPE - _____
* PART NUMBER
* PART DESCRIPTION

www.swisherinc.com
TELEPHONE - 1-800-222-8183
FAX - 1-660-747-8650

SWISHER MOWER & MACHINE CO. INC.
1602 CORPORATE DRIVE
WARRENSBURG, MO 64093

SWISHER MOWER & MACHINE CO. INC.