# Owner's Manual

**Model No.**

**13497**

**IMPORTANT**
**Read and follow all Safety Precautions and Instructions Before Operating this Equipment.**

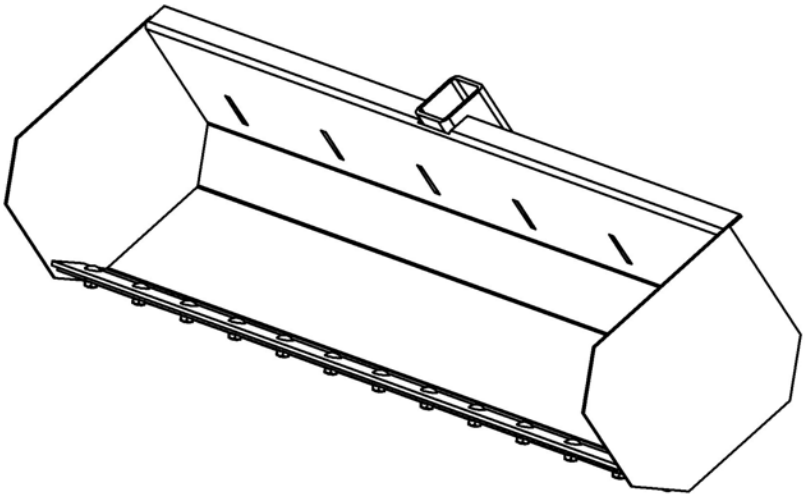

# Rear Implement – Box Scraper

*For use with*

*Swisher Rear Implement Mount System - P/N 6462*

The manufacturer's warranty to the original consumer purchaser is: This product is free from defects in materials and workmanship for a period of one (1) year from the date of purchase by the original consumer purchaser. We will repair or replace, at our discretion, parts found to be defective due to materials or workmanship. This warranty is subject to the following limitations and exclusions:

| | |
|---|---|
| 1) Commercial Use | The warranty period for any product used for commercial or rental is limited to ninety (90) days from the date of original purchase. |
| 2) Limitations | This warranty applies only to products which have been properly assembled, adjusted, and operated in accordance with the instructions contained within this manual. This warranty does not apply to any product of Swisher Mower Co., Inc., that has been subject to alteration, misuse, abuse, improper assembly or installation, or shipping damage. |
| 3) Exclusions | Excluded from this warranty are normal wear, normal adjustments, and normal maintenance. |

In the event you have a claim under this warranty, you must return the product to an authorized service dealer. All transportation charges, damage, or loss incurred during transportation of parts submitted for replacement or repair under this warranty shall be borne by the purchaser. Should you have any questions concerning this warranty, please contact us toll-free at 1-800-222-8183. The model number, serial number, date of purchase, and the name of the authorized Swisher dealer from whom you purchased the product will be needed before any warranty claim can be processed.

THIS WARRANTY DOES NOT APPLY TO ANY INCIDENTAL OR CONSEQUENTIAL DAMAGES AND ANY IMPLIED WARRANTIES
ARE LIMITED TO THE SAME TIME PERIODS STATED HEREIN
FOR ALL EXPRESSED WARRANTIES.

Some states do not allow the limitation of consequential damages or limitations on how long an implied warranty may last, so the above limitations or exclusions may not apply to you. This warranty gives you specific legal rights and you may have other rights, which vary from state-to-state. This is a limited warranty as defined by the Magnuson-Moss Act of 1975.

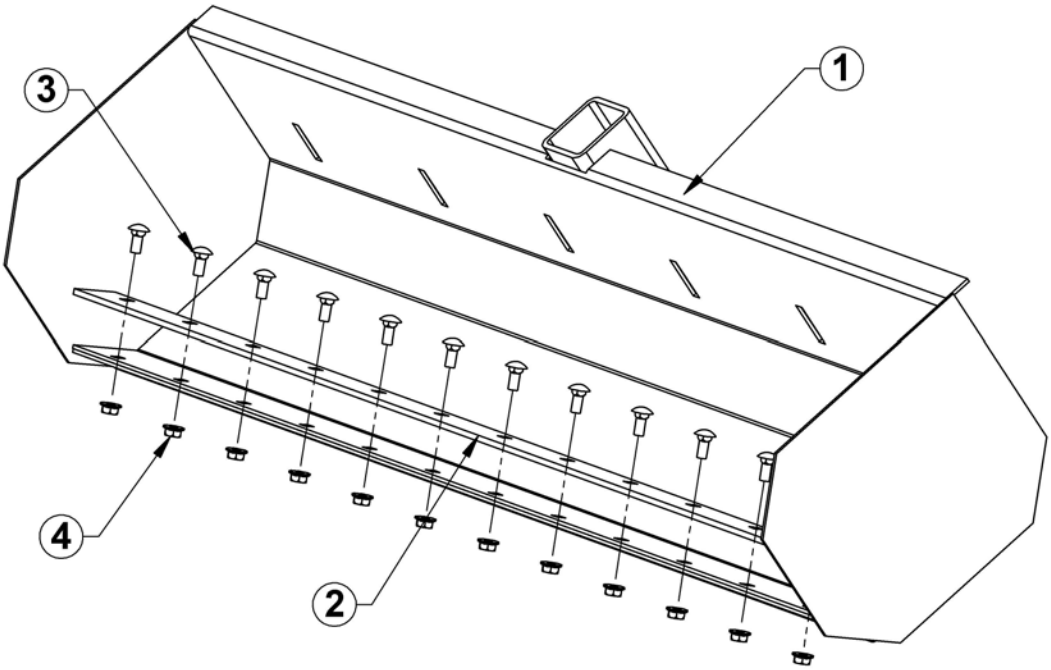


| ITEM NO. | QTY. | PART NO. | DESCRIPTION |
|---|---|---|---|
| 1 | 1 | 13512TC | BOX SCRAPER BUCKET WELDMENT |
| 2 | 1 | 13688TK | BOX-SCRAPER BLADE EDGE ATTACH |
| 3 | 12 | 10216 | 5/16-18 X 3/4 Carriage Screw |
| 4 | 12 | NB170 | 5/16-18 SERR FLANGE NUT |

## DECAL LOCATIONS

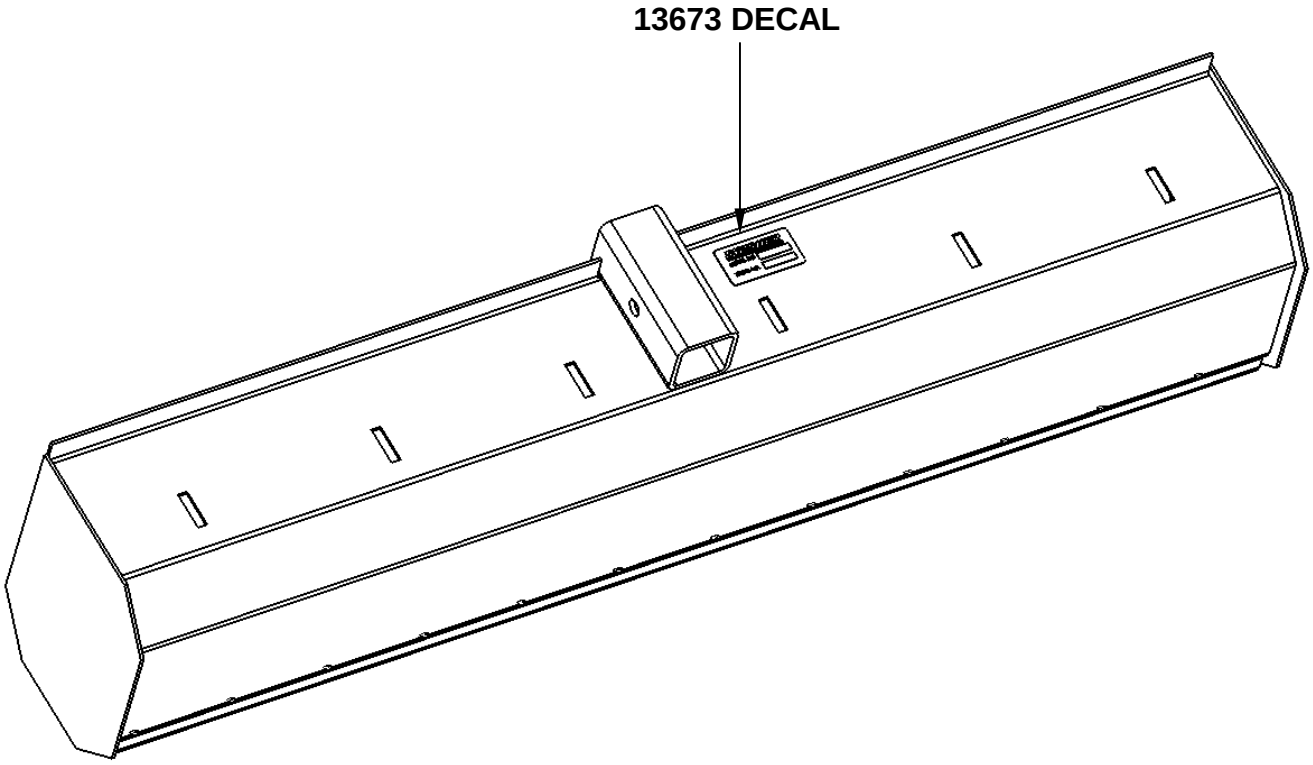

**NOTES:**

**NOTES:**

**NOTES:**

MANUFACTURING QUALITY LAWN CARE EQUIPMENT SINCE 1945

# Owner's Manual

## Box Scraper

Model No.1
13497

**IMPORTANT**
Read and follow all Safety Precautions and Instructions Before Operating this Equipment.

WHEN ORDERING PARTS, PLEASE HAVE THE FOLLOWING INORMATION AVAILABLE:

* PRODUCT – _____
* MODEL NUMBER - _____
* PART NUMBER WITH PAINT CODE
* PART DESCRIPTION

TELEPHONE - 1-800-222-8183
FAX - 1-660-747-8650

SWISHER MOWER & MACHINE CO. INC.
1602 CORPORATE DRIVE
P.O. BOX 67
WARRENSBURG, MO 64093

swisherinc.com