MANUFACTURING QUALITY LAWN CARE EQUIPMENT SINCE 1945

Owner's Manual

Universal Quick Switch Rear Mount Add-On Kit

Model No.

6461

IMPORTANT
Read and follow all Safety Precautions and Instructions Before Operating this Equipment.

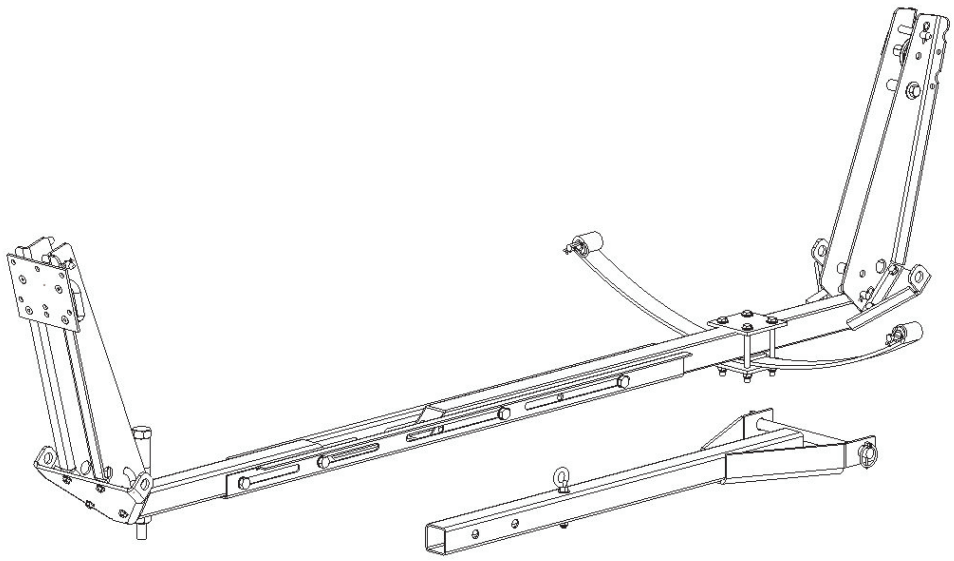

Universal Quick Switch System
Rear Mount System Add-on Kit

1602 CORPORATE DRIVE PO BOX 67 WARRENSBURG, MISSOURI 64093
PH 660.747.8183 FAX 660.747.8650
swisherinc.com

14130 REV. 08-065

The manufacturer's warranty to the original consumer purchaser is: This product is free from defects in materials and workmanship for a period of one (1) year from the date of purchase by the original consumer purchaser. We will repair or replace, at our discretion, parts found to be defective due to materials or workmanship. This warranty is subject to the following limitations and exclusions:

1) Commercial Use	The warranty period for any product used for commercial or rental is limited to ninety (90) days from the date of original purchase.
2) Limitations	This warranty applies only to products which have been properly assembled, adjusted, and operated in accordance with the instructions contained within this manual. This warranty does not apply to any product of Swisher Mower Co., Inc., that has been subject to alteration, misuse, abuse, improper assembly or installation, or shipping damage.
3) Exclusions	Excluded from this warranty are normal wear, normal adjustments, and normal maintenance.

In the event you have a claim under this warranty, you must return the product to an authorized service dealer. All transportation charges, damage, or loss incurred during transportation of parts submitted for replacement or repair under this warranty shall be borne by the purchaser. Should you have any questions concerning this warranty, please contact us toll-free at 1-800-222-8183. The model number, serial number, date of purchase, and the name of the authorized Swisher dealer from whom you purchased the product will be needed before any warranty claim can be processed.

THIS WARRANTY DOES NOT APPLY TO ANY INCIDENTAL OR CONSEQUENTIAL DAMAGES AND ANY IMPLIED WARRANTIES
ARE LIMITED TO THE SAME TIME PERIODS STATED HEREIN
FOR ALL EXPRESSED WARRANTIES.

Some states do not allow the limitation of consequential damages or limitations on how long an implied warranty may last, so the above limitations or exclusions may not apply to you. This warranty gives you specific legal rights and you may have other rights, which vary from state-to-state. This is a limited warranty as defined by the Magnuson-Moss Act of 1975.

SAFETY PRECAUTIONS & DECALS

This Safety Alert Symbol indicates important messages in this manual. When you see this symbol, carefully read the message that follows and be alert to the possibility of personal injury.

Read this manual completely. Failure to observe the following safety instructions could result in serious injury or death.

- Read the manual. Learn to operate this machine safely.
- Keep the operating speed LOW!!!!! Do not operate over 5 MPH (8KMH).
- Allow only responsible adults who are familiar with these instructions to operate this machine. Never allow children to operate this machine.
- Be sure the area is clear of other people before operating. Children are often attracted to the machine and the operating activity. **Never assume that children will remain where you last saw them.** Keep children under the watchful care of another responsible adult.
- Watch for traffic when operating near or crossing roadways.
- Do not operate the attachment if it has been dropped or damaged in any manner. Repair as necessary.
- Stop and inspect the equipment if you strike an object. Repair if necessary, before restarting.
- Dress properly. Do not operate when bare foot or wearing open sandals.
- Do not operate the machine while under the influence of alcohol or drugs.
- Never tamper with safety devices. Check their proper operation regularly.
- Operate attachments up and down slopes. There is a significant risk of overturns when operating across slopes.
- **Never make adjustments or repairs with the ATV engine running.**

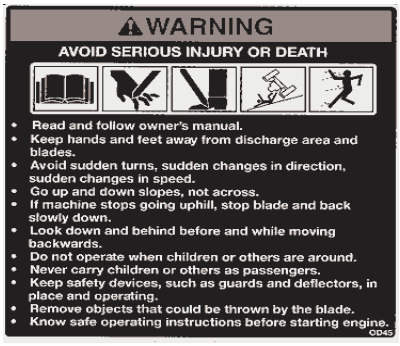

OD45 Warning Decal

OD55 Danger Decal

Note: ***This system is designed to be used as an add-on with the Swisher P/N 2646 Front Mount System to enable the use of Rear Mounted Implements. Please refer to the P/N 2646 Owners Manual (P/N 2800) regarding the installation of that system. Refer to page 6 of this manual to modify your existing 2646 slide bar weldment.***

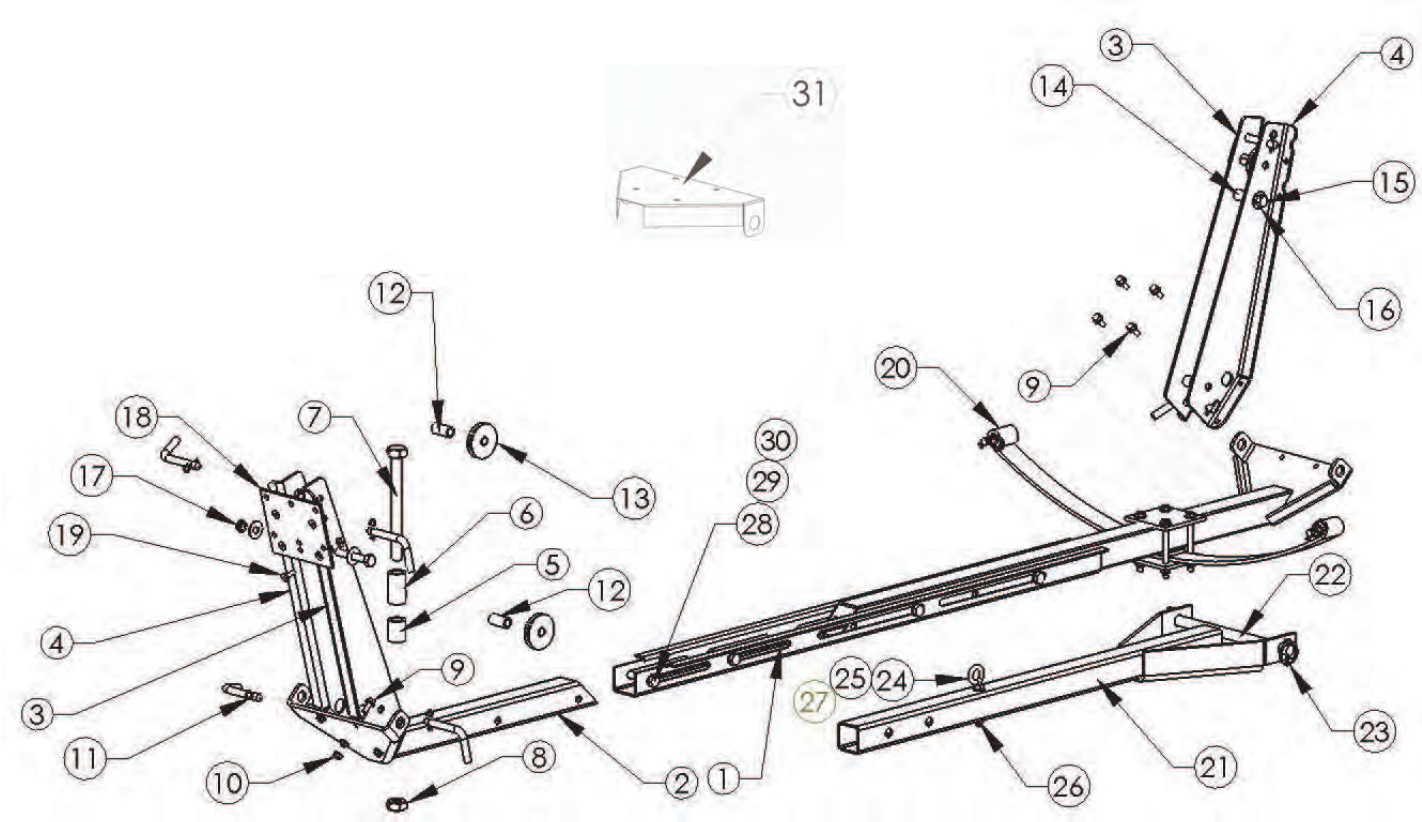

Parts List – P/N 6461 QS Rear Mount System Add-On Kit

ITEM NO.	QTY.	PART NO.	DESCRIPTION
1	1	13417TK	Channel – Implement System
2	1	13422TK	Rear Pin Weldment
3	2	14090TK	Arm - Rear Implement; “B" Weldment
4	2	14091TK	Arm - Rear Implement; “A" Weldment
5	1	2655TK	Spacer 1.25 X .75 X 1.50
6	1	9609TK	Spacer 1.25 X .75 X 2.1875
7	1	NB655	3/4-10 X 7 1/2 GR5 Bolt
8	1	NB609	3/4-10 Nyloc Nut

Parts List – P/N 6461 QS Rear Mount *(Continued)*

ITEM NO.	QTY.	PART NO.	DESCRIPTION
9	8	NB596	5/16-18 x 3/4 SERRATED FLANGE BOLT
10	12	NB170	5/16-18 SERR FLANGE NUT
11	8	NB606	1/2" x 3" Bent Pin w/Hair Clip
12	4	ES130TK	Spacer Rolled 3/4 OD X 1/2 ID X 1 1/2
13	4	10211	2 1/2" CABLE PULLEY
14	2	14089TK	Spacer - 1/2" ID x 2"
15	2	NB131	1/2-13 X 3 HCC GR5 Bolt ZP
16	4	NB555	1/2 USS Flat Washer ZP
17	2	NB688	Nut - 1/2 -13 Nyloc, Jam
18	1	14057TK	Plate - Winch Mt.; Rear Implement System
19	4	NB782	5/16"-18 X .75 Flat Head Cap Screw
✦ 20	1	Existing Parts	P/N 2646 QS Front Mount System
21	1	13513TK	Bucket Plow Hitch Weldment
22	1	2642TK	Plow Mount Pin 3/4 x 12
23	2	NB506	3/16 Click Pin
24	1	NB635	3/8 – 16 x 3 Turned Eye Bolt
25	2	NB272	3/8 SAE Washer
26	1	NB182	3/8 – 16 Nylock Nut
27	1	NB676	3/8 – 16 Heavy Hex Nut
28	2	NB577	1/2 – 13 x 3.50 UNC 2A Bolt
29	2	NB281	1/2 – 13 Nylock Nut
30	4	NB177	1/2 NR Mach Bushing 14 GA
31	1	14953	Drill Template

✦ *Indicates components that are part of P/N 2646 Front Mount System.*

2646 Modification Instructions:

Using the 14953 Drill Template included in this 6461 Add on Kit, it will be necessary to modify your existing 2646 QS kit. Using the metal template, a 3/8" diameter drill bit, a drill and a scratch awl, mark and drill your existing 2646 front slide bar weldment. This must be modified to accept the "A" and "B" implement arms from your new kit. Pay close attention to the steps and picture below:

(1) Gather a 3/8" drill bit, electric hand drill, 14953 drill template, and the 2593 slide bar weldment from your original 2646 kit.

(2) Place the metal template over the 2593 weldment triangle and line up the hinge holes. Center the template on the width of the weldment. Hold in place and mark the 4 holes on the template.

(3) Use a center punch or scratch awl to create a center for the drill bit to start on.

(4) Using a 3/8" drill bit drill out all 4 holes. Remove any burrs that were created.

(5) Modification is complete refer to the exploded view for final assembly.

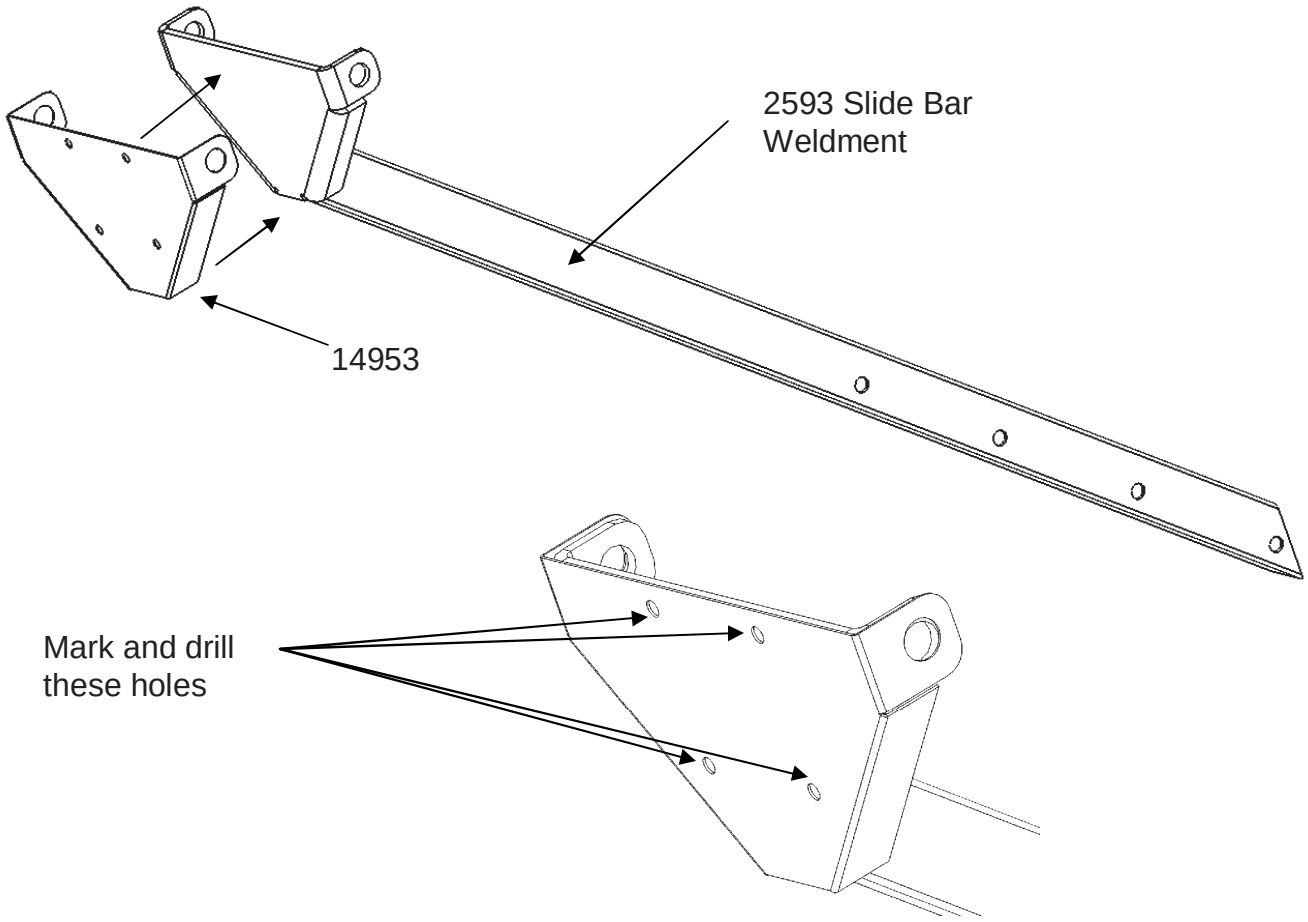

NOTES:

MANUFACTURING QUALITY LAWN CARE EQUIPMENT SINCE 1945

Owner's Manual

Universal Quick Switch Rear Mount Add-On Kit

Model No.

6461

IMPORTANT
Read and follow all Safety Precautions and Instructions Before Operating this Equipment.

WHEN ORDERING PARTS, PLEASE HAVE THE FOLLOWING INORMATION AVAILABLE:

* PRODUCT – _____
* MODEL NUMBER - _____
* PART NUMBER WITH PAINT CODE
* PART DESCRIPTION

TELEPHONE - 1-800-222-8183
FAX - 1-660-747-8650

SWISHER MOWER & MACHINE CO. INC.
1602 CORPORATE DRIVE
P.O. BOX 67
WARRENSBURG, MO 64093

swisherinc.com