MANUFACTURING QUALITY LAWN CARE EQUIPMENT SINCE 1945

Owner's Manual

36" PLUG DRUM AERATOR

14285

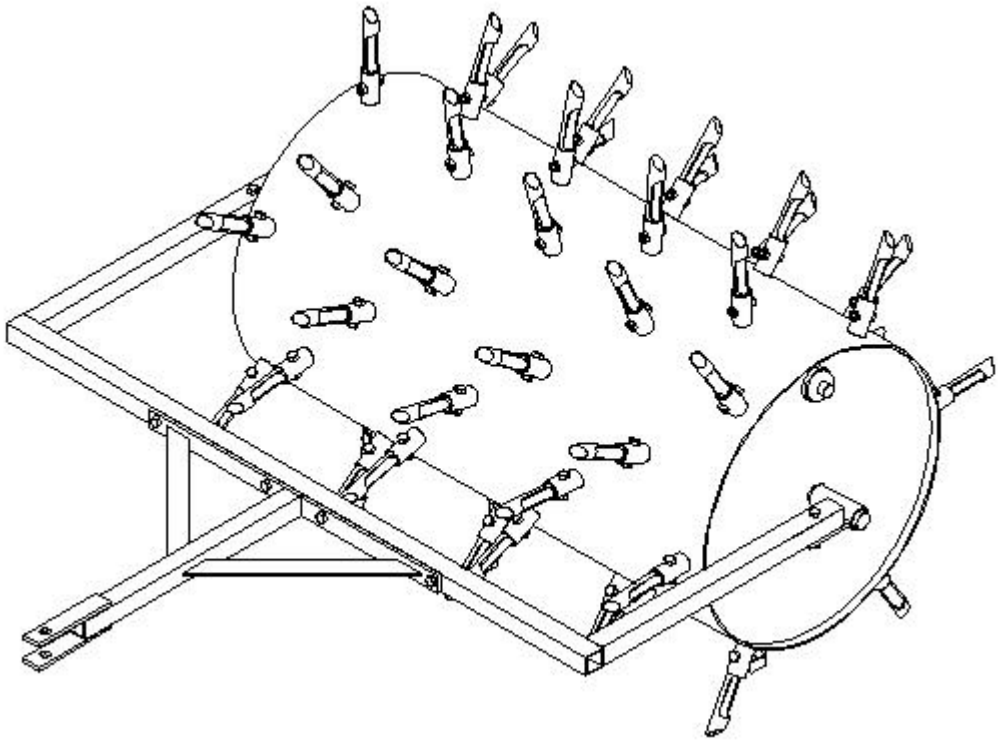

IMPORTANT
Read and follow all Safety Precautions and Instructions Before Operating this Equipment.

Made In CHINA

1602 CORPORATE DRIVE, PO BOX 67, WARRENSBURG, MISSOURI 64093
PH 660.747.8183 FAX 660.747.8650
swisherinc.com

LIMITED WARRANTY

The manufacturer's warranty to the original consumer purchaser is: This product is free from defects in materials and workmanship for a period of One (1) year from the date of purchase by the original consumer purchaser. We will repair or replace, at our discretion, parts found to be defective due to materials or workmanship. This warranty is subject to the following limitations and exclusions:

1) Commercial Use	**This product is not intended for commercial use and carries no commercial warranty.**
2) Limitation	This warranty applies only to products which have been properly assembled, adjusted, and operated in accordance with the instructions contained within this manual. This warranty does not apply to any product of Swisher Mower Co., Inc., that has been subject to alteration, misuse, abuse, improper assembly or installation, shipping damage, or to normal wear of the product.
3) Exclusions	Excluded from this warranty are normal wear, normal adjustments, and normal maintenance.

In the event you have a claim under this warranty, you must return the product to an authorized service dealer. All transportation charges, damage, or loss incurred during transportation of parts submitted for replacement or repair under this warranty shall be borne by the purchaser. Should you have any questions concerning this warranty, please contact us toll-free at 1-800-222-8183. The model number, serial number, date of purchase, and the name of the authorized Swisher dealer from whom you purchased the mower will be needed before any warranty claim can be processed.

THIS WARRANTY DOES NOT APPLY TO ANY INCIDENTAL OR CONSEQUENTIAL DAMAGES AND ANY IMPLIED WARRANTIES ARE LIMITED TO THE SAME TIME PERIODS STATED HEREIN FOR ALL EXPRESSED WARRANTIES. Some states do not allow the limitation of consequential damages or limitations on how long an implied warranty may last, so the above limitations or exclusions may not apply to you. This warranty gives you specific legal rights and you may have other rights, which vary from state-to-state. This is a limited warranty as defined by the Magnuson-Moss Act of 1975.

1: Insert plugger into plugger holder
and line up holes to prepare for step 2

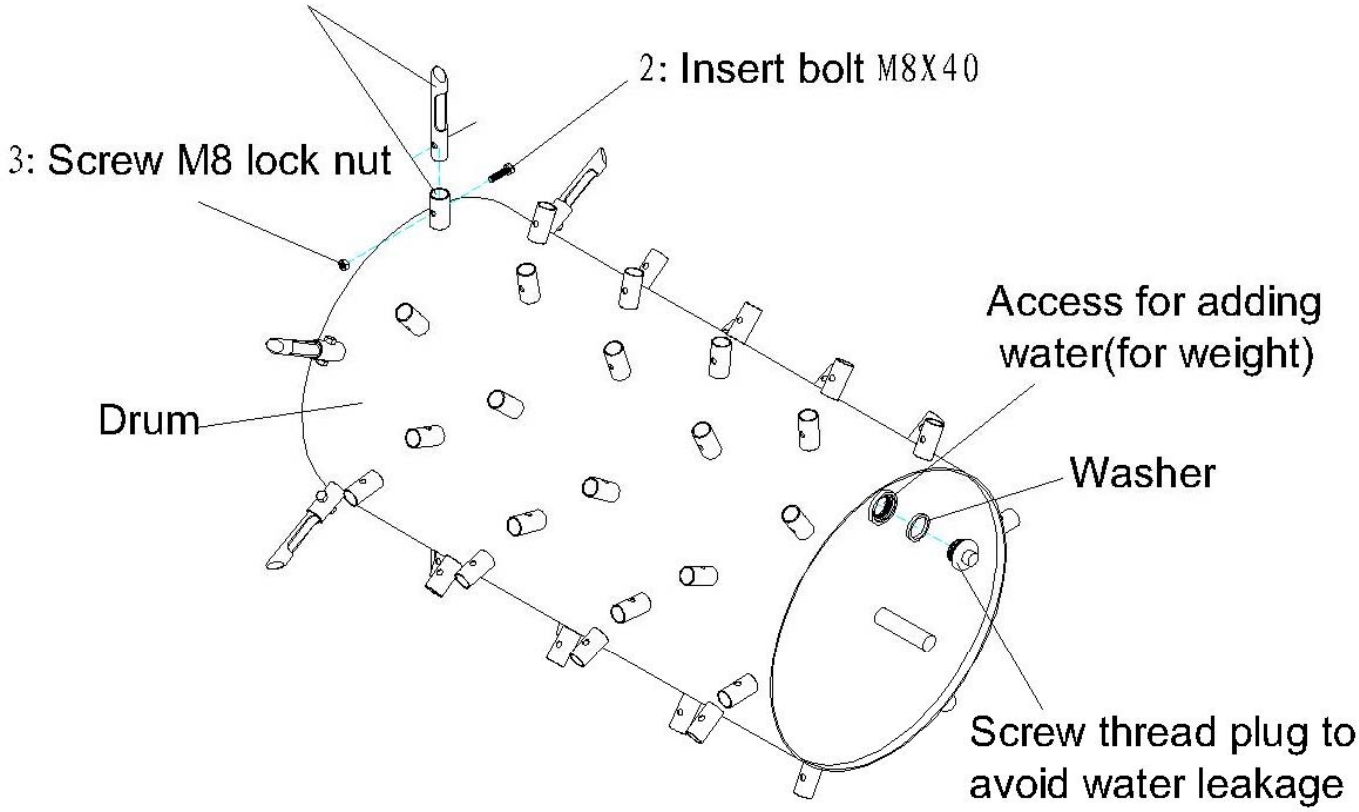

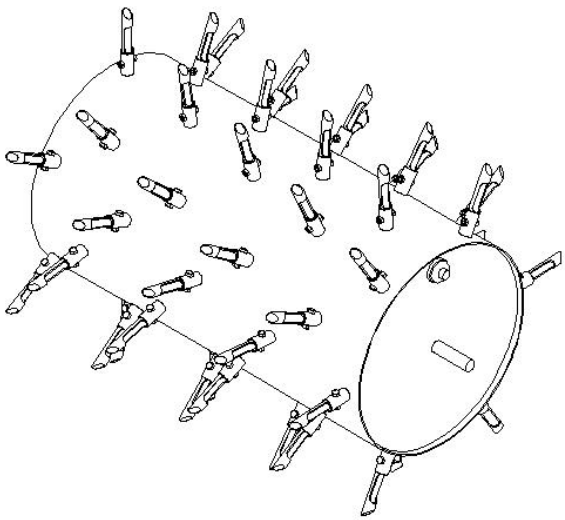

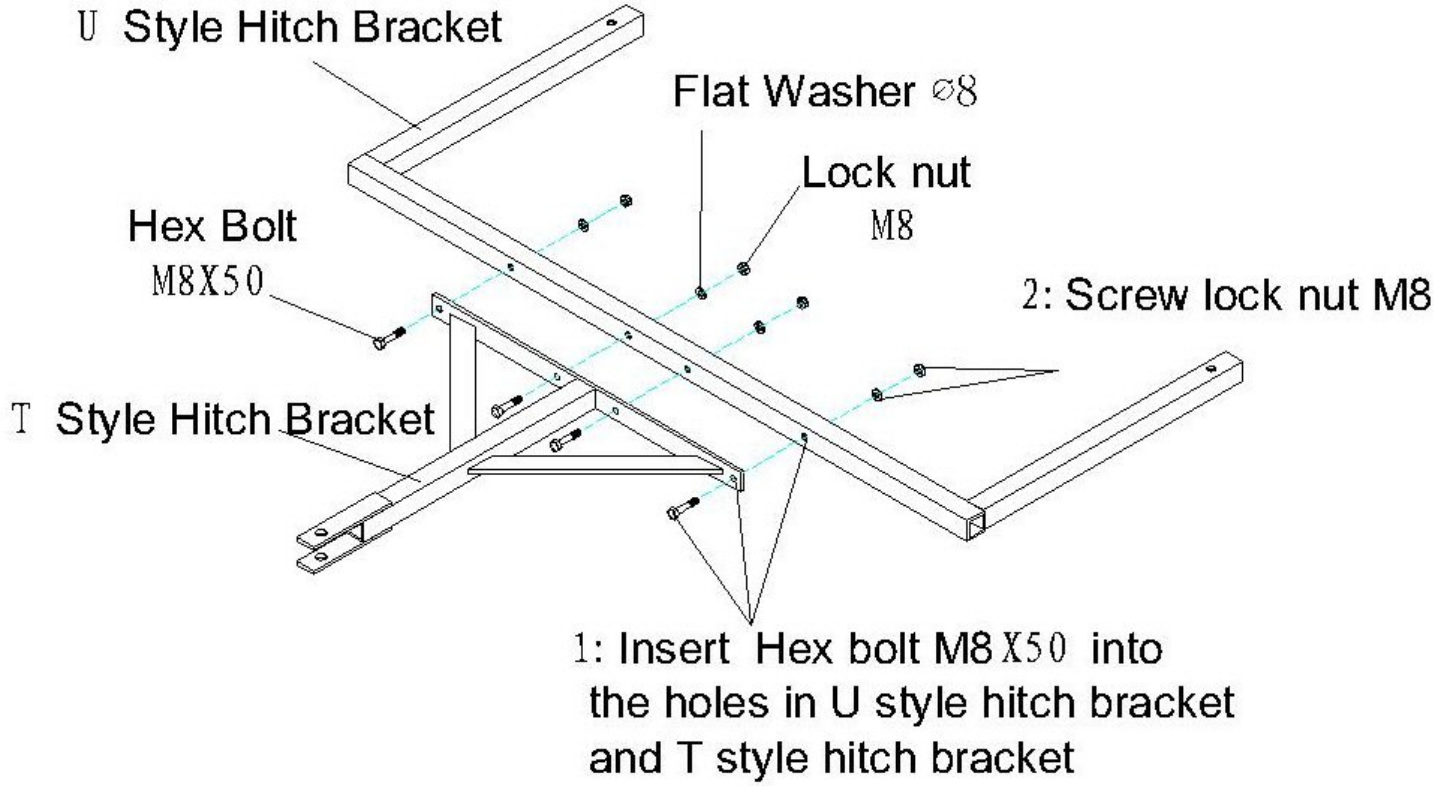
U Style Hitch Bracket
Flat Washer ⌀8
Lock nut
M8
Hex Bolt
M8X50
2: Screw lock nut M8
T Style Hitch Bracket
1: Insert Hex bolt M8X50 into
the holes in U style hitch bracket
and T style hitch bracket

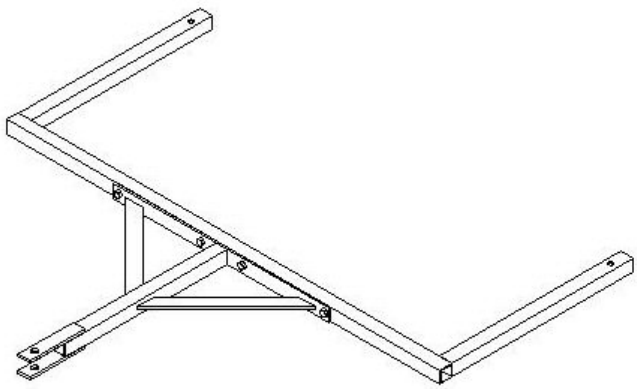

1: Install joint bushing support to pivot bracket

Drum Assembly

Hex Bolt
M10X55

Toungue Assembly

Flat Washer ⌀10

Lock Nut
M10

2: Connect tongue assembly with joint bushing support

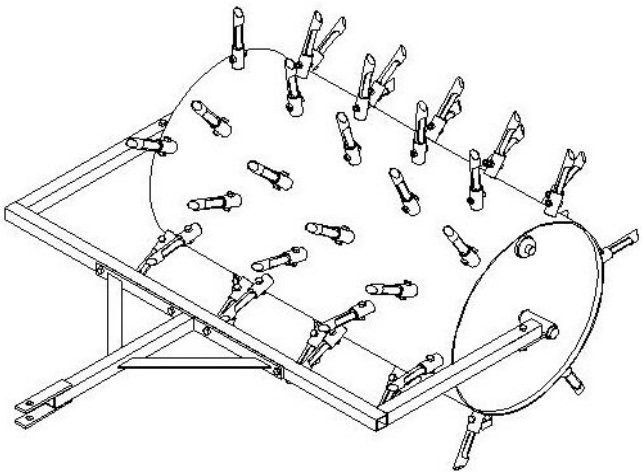

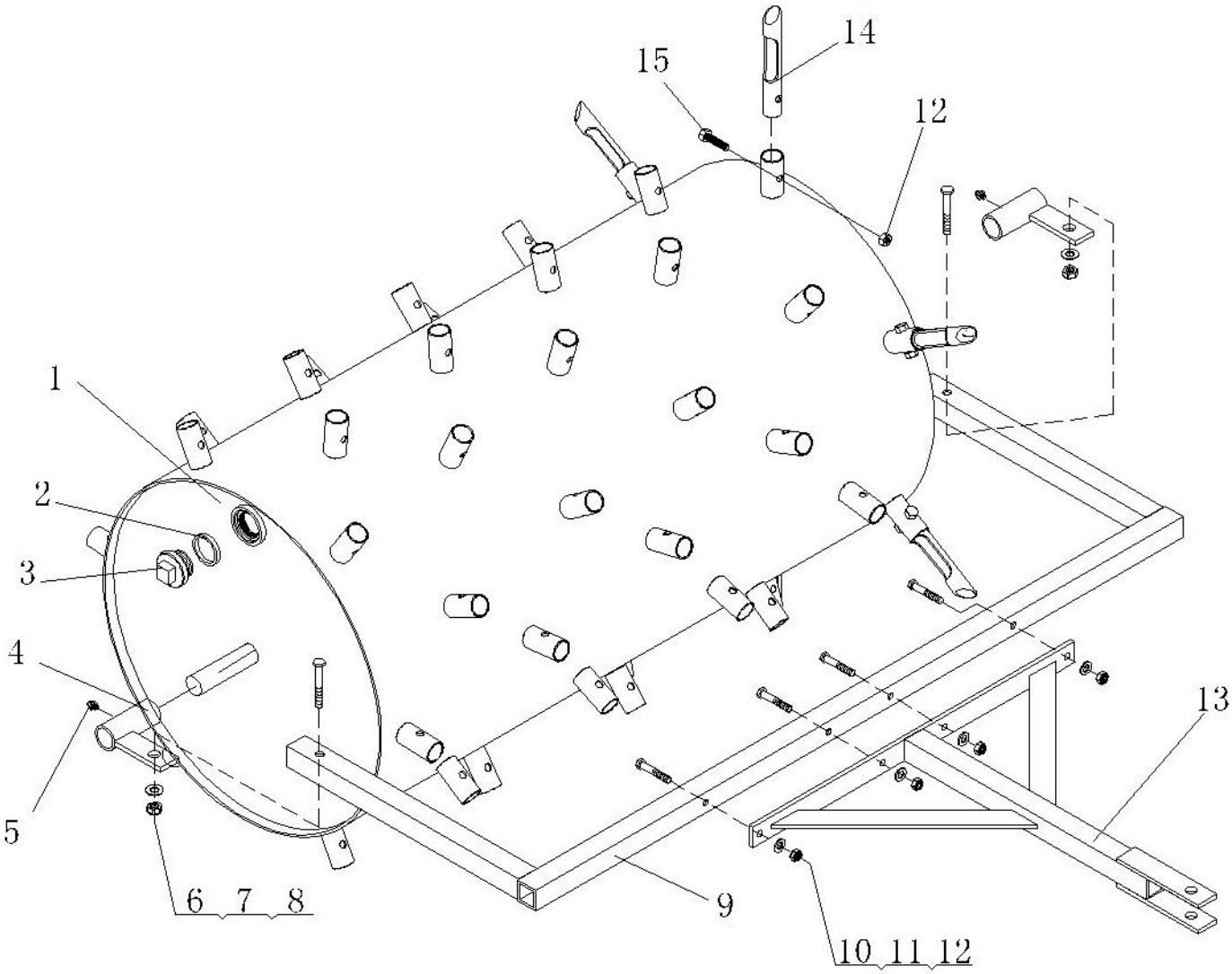

ITEM#	PRT#	DESC	QTY	ITEM#	PART#	DESC	QTY
1	14627	Roller Support	1	9	14629	"U" Towing Bracket	1
2	13064	Seal - Rubber O-Ring	1	10	NB721	Bolt M8×55	4
3	13069	Plug with Thread	1	11	NB275	Flat Washer Ø8	4
4	14628	Joint Bushing Support	2	12	12221	Lock Nut M8	58
5	14672	Oil Cup M6	2	13	14630	"T" Towing Bracket	1
6	NB630	Bolt M10×60	2	14	14633	Plug	54
7	NB272	Flat Washer Ø10	2	15	NB152	BOLT M8×40	54
8	12102	Lock Nut M10	2				

MANUFACTURING QUALITY LAWN CARE EQUIPMENT SINCE 1945

Owner's Manual

14626

ATV & LAWN ACCESSORIES

WHEN ORDERING PARTS, PLEASE HAVE THE FOLLOWING INORMATION AVAILABLE:

* PRODUCT – _____
* SERIAL NUMBER - _____
* MODEL NUMBER - _____
TYPE - _____
* PART NUMBER WITH PAINT CODE
* PART DESCRIPTION

TELEPHONE - 1-800-222-8183
FAX - 1-660-747-8650

SWISHER MOWER & MACHINE CO. INC.
1602 CORPORATE DRIVE
P.O. BOX 67
WARRENSBURG, MO 64093

swisherinc.com

IMPORTANT
Read and follow all Safety Precautions and Instructions Before Operating this Equipment.