MANUFACTURING QUALITY LAWN CARE EQUIPMENT SINCE 1945

Owner's Manual

Bucket 15714

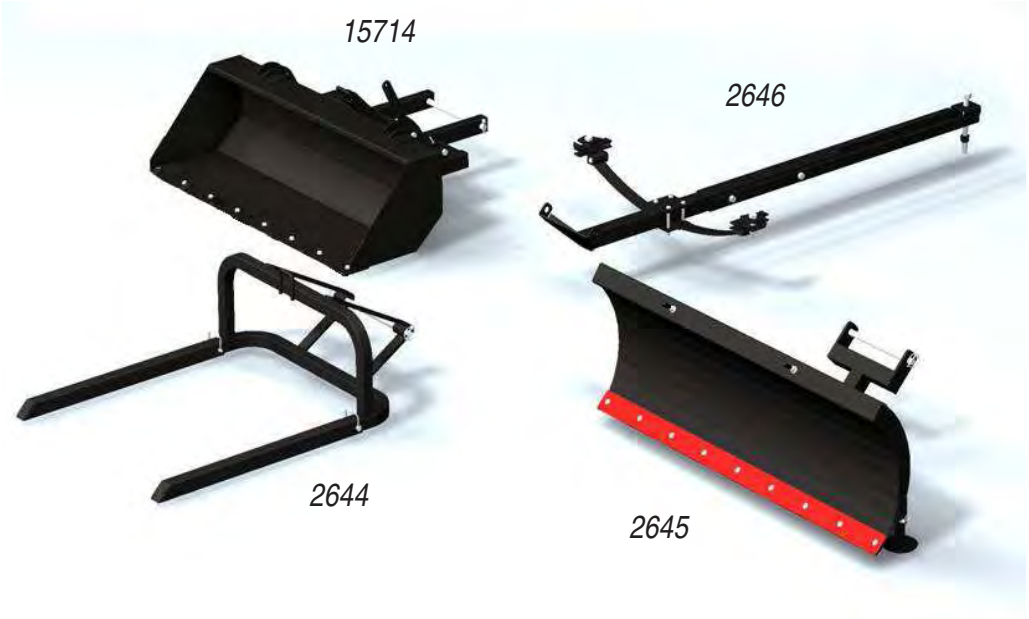

IMPORTANT
Read and follow all Safety Precautions and Instructions Before Operating this Equipment.

ATV ACCESSORIES

Sold as Separate Pieces!!!!

***A Winch with a mechanical brake is required for this attachment.**

ASSEMBLY
OPERATION
SERVICE AND ADJUSTMENT
REPAIR PARTS

Made In The
USA

1602 CORPORATE DRIVE PO BOX 67 WARRENSBURG, MISSOURI 64093
PH 660.747.8183 FAX 660.747.8650
swisherinc.com

LIMITED WARRANTY

The manufacturer's warranty to the original consumer purchaser is: This product is free from defects in materials and workmanship for a period of one (1) year from the date of purchase by the original consumer purchaser. We will repair or replace, at our discretion, parts found to be defective due to materials or workmanship. This warranty is subject to the following limitations and exclusions:

1) Commercial Use	The warranty period for any product used for commercial or rental is limited to ninety (90) days from the date of original purchase.
2) Limitations	This warranty applies only to products which have been properly assembled, adjusted, and operated in accordance with the instructions contained within this manual. This warranty does not apply to any product of Swisher Mower Co., Inc., that has been subject to alteration, misuse, abuse, improper assembly or installation, or shipping damage.
3) Exclusions	Excluded from this warranty are normal wear, normal adjustments, and normal maintenance.

In the event you have a claim under this warranty, you must return the product to an authorized service dealer. All transportation charges, damage, or loss incurred during transportation of parts submitted for replacement or repair under this warranty shall be borne by the purchaser. Should you have any questions concerning this warranty, please contact us toll-free at 1-800-222-8183. The model number, serial number, date of purchase, and the name of the authorized Swisher dealer from whom you purchased the mower will be needed before any warranty claim can be processed.

THIS WARRANTY DOES NOT APPLY TO ANY INCIDENTAL OR CONSEQUENTIAL DAMAGES AND ANY IMPLIED WARRANTIES ARE LIMITED TO THE SAME TIME PERIODS STATED HEREIN FOR ALL EXPRESSED WARRANTIES. Some states do not allow the limitation of consequential damages or limitations on how long an implied warranty may last, so the above limitations or exclusions may not apply to you. This warranty gives you specific legal rights and you may have other rights, which vary from state-to-state. This is a limited warranty as defined by the Magnuson-Moss Act of 1975.

SAFETY PRECAUTIONS & DECALS

This Safety Alert Symbol indicates important messages in this manual. When you see this symbol, carefully read the message that follows and be alert to the possibility of personal injury.

Read this manual completely. Failure to observe the following safety instructions could result in serious injury or death.

- Read the manual. Learn to operate this machine safely.
- Keep the operating speed LOW!!!!!
- Allow only responsible adults who are familiar with these instructions to operate this machine. Never allow children to operate this machine.
- Be sure the area is clear of other people before operating. Children are often attracted to the machine and the operating activity. ***Never assume that children will remain where you last saw them.*** Keep children under the watchful care of another responsible adult.
- Watch for traffic when operating near or crossing roadways.
- Do not operate the attachment if it has been dropped or damaged in any manner. Repair as necessary.
- Dress properly. Do not operate when barefoot or wearing open sandals.
- Do not operate the machine while under the influence of alcohol or drugs.
- Never tamper with safety devices. Check their proper operation regularly.

- Operate attachments up and down slopes. There is significant risk of overturns when operating across slopes.

- Stop and inspect the equipment if you strike an object. Repair, if necessary, before restarting.

- Never make adjustments or repairs with the engine running.

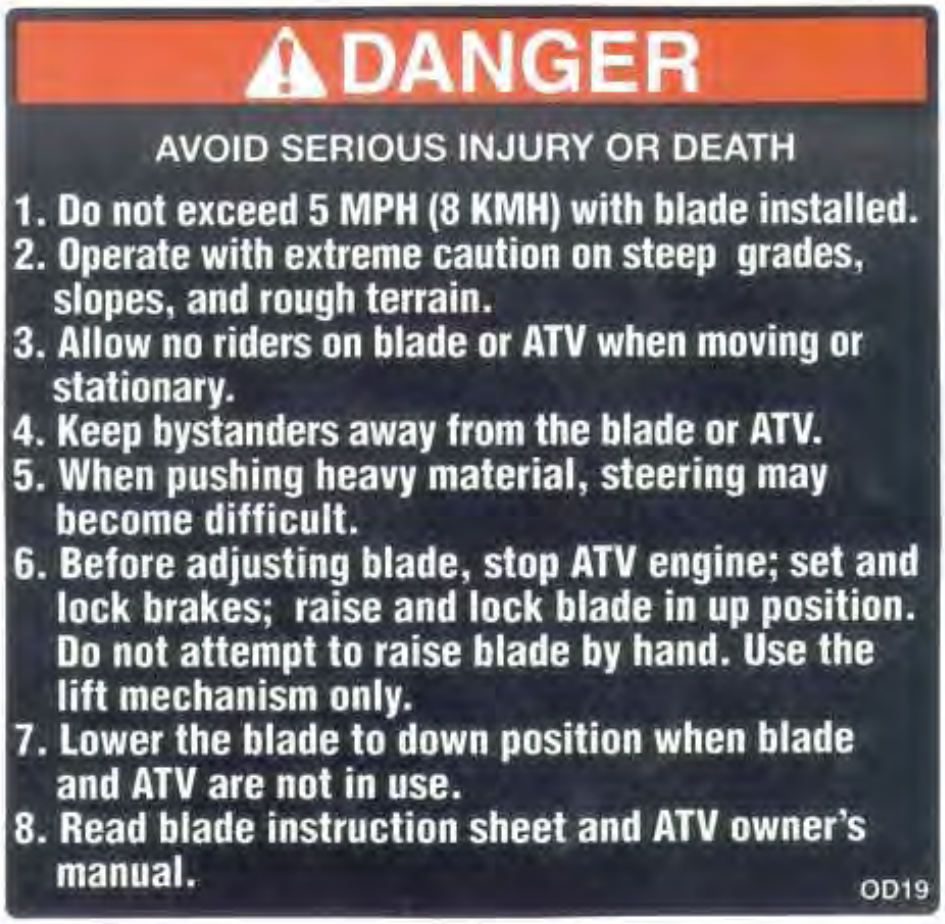

BUCKET ATTACHMENT ASSEMBLY

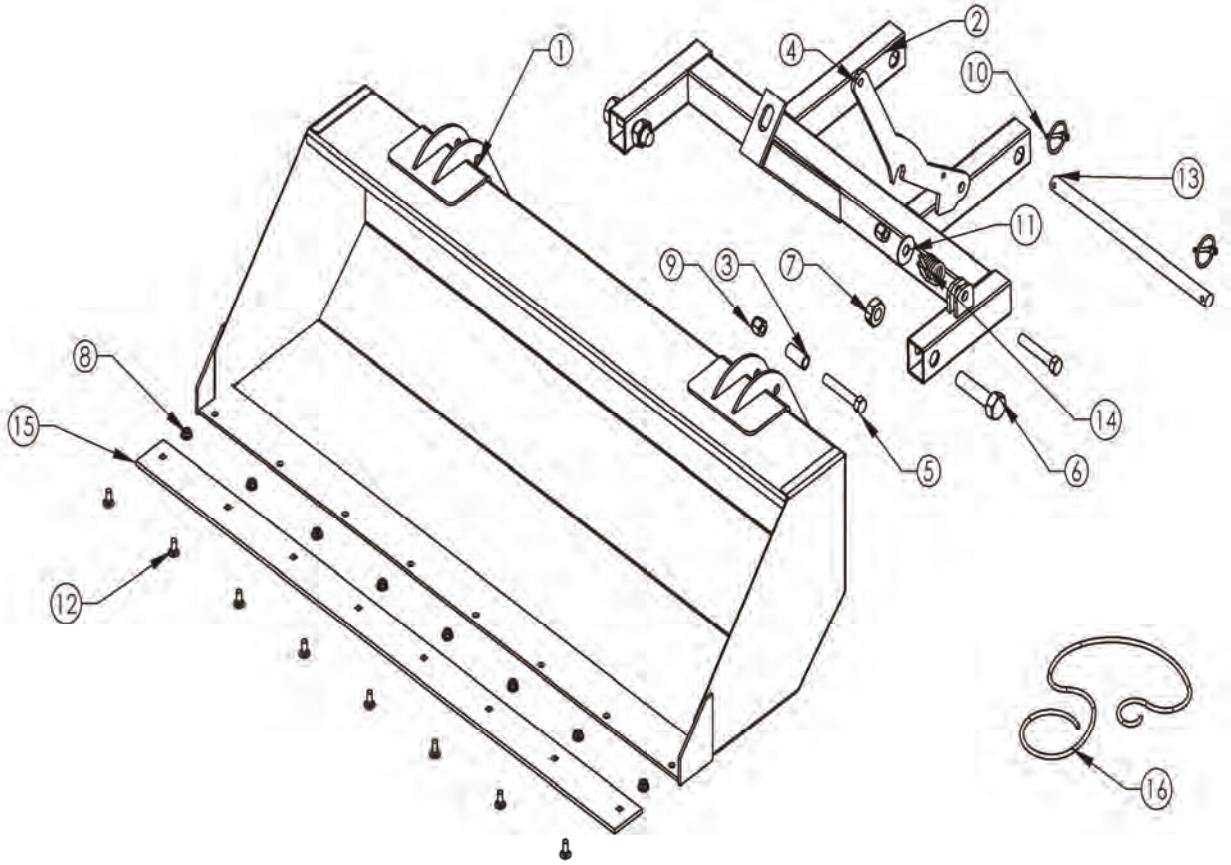

FIGURE 1

ITEM NO.	QTY.	PART NO.	DESCRIPTION
1		5500TK	ATV BUCKET WELDMENT
2	1	5502TK	BUCKET HITCH WELDMENT
3	1	5626TK	ROLLER BUSHING
4	1	5625TK	BUCKET LATCH
5	2	NB131	BOLT - 1/2-13 X 3 HCC GR5 ZP
6	2	NB245	BOLT - 3/4-10 X 3
7	2	NB609	NUT - 3/4-10 NYLOC
8	8	NB170	NUT - 5/16-18 SERF FLANGE
9	2	NB281	NUT - NYLOC 1/2-13 ZY
10	2	NB506	3/16 CLICK PIN
11	1	TR150W	WASHER - FRONT WHEEL (HT)
12	8	10206	BOLT - CARRIAGE 5/16-18 X 3/4 GF
13	1	2654TK	PLOW MOUNT PIN 3/4 X 14.25
14	1	2736	SPRING FOR BUCKET LATCH
15	1	15646TK	BLADE EDGE - 44" ATV BUCKET *
16	1	H9B	RED SAFTEY ROPE

* OPTIONAL
TOOTHED BLADE
EDGE AVAILABLE
SOLD SEPARATLEY
P/N 5505TK

INSTALLATION OF BUCKET ATTACHMENT

TO ENSURE PROPER INSTALLATION, CARFULLY FOLLOW ALL INSTRUCTIONS LISTED BELOW

REFER TO FIGURE 1 WHILE INSTALLING THE BUCKET ATTACHMENT

1. BEGIN BY LAYING OUT THE PARTS SIMILAR TO FIGURE 1
2. ATTACH THE BUCKET HITCH(3) TO THE BUCKET(1) USING BOLTS(6) AND NUTS (7).
3. INSTALL THE LATCH REST BOLT(4), ROLLER BUSHING(16) AND NUT(10) TO THE BUCKET.
4. PLACE THE BUCKET LATCH(5) IN THE UPRIGHT TABS ON THE BUCKET HITCH(3) USING BOLT(4) TO HOLD IT THERE.
5. INSERT THE BENT PART OF THE SPRING(13) INTO THE BUCKET LATCH(5) ON THE SIDE FACING THE CENTER OF THE BUCKET HITCH(3) AND OVER THE BOLT (4) GOING THROUGH THE LATCH. THE LONG STRAIGHT PART OF THE SPRING WILL REST ON TOP OF THE BUCKET HITCH(3).
6. NEXT, PLACE THE WASHER(14) OVER BOLT (4) ENDING WITH NUT (10), TIGHTEN THE ASSEMBLY UNTIL THE NUT IS ALL THE WAY ON THE BOLT, ALLOWING LATCH (5) TO ROTATE FREELY.
7. PLACE THE ASSEMBLED BUCKET ATTACHMENT IN FRONT OF YOUR ALREADY INSTALLED **SWISHER** ACCESSORY MOUNT.
8. INSERT THE PLOW MOUNT PIN(11) THROUGH THE BUCKET HITCH AND THE ACCESSORY MOUNT.
9. SECURE THE PIN WITH THE CLICK PINS(12) ON EACH END OF THE MOUNT PIN.
10. TIE THE RED TRIP RELEASE ROPE(15) TO THE TOP OF THE BUCKET LATCH(5).
11. ATTACH YOUR WINCH HOOK TO THE TOP OF THE BUCKET HITCH, THROUGH THE EYELET PROVIDED.

ADJUSTMENT AND OPERATION

DROP YOUR LOAD!!

AFTER INSTALLING THE BUCKET, MAKE SURE THE ROPE IS TIED TO YOUR ATV SOMEWHERE YOU CAN GRAB WHILE OPERATING. TO DROP YOUR LOAD FROM THE BUCKET, RAISE THE BUCKET WITH THE WINCH AND PULL THE ROPE. THIS WILL DIS-ENGAGE THE BUCKET LATCH AND DROP YOUR LOAD. TO RE-ENGAGE THE BUCKET LATCH SLOWLY REVERSE YOUR ATV AND LOWER YOUR WINCH AT THE SAME TIME UNTIL THE BUCKET LATCH CLICKS BACK INTO LOCKING POSITION.

Notes:

MANUFACTURING QUALITY LAWN CARE EQUIPMENT SINCE 1945

Owner's Manual

Bucket 15714

IMPORTANT
Read and follow all Safety Precautions and Instructions Before Operating this Equipment.

ATV ACCESSORIES

WHEN ORDERING PARTS, PLEASE HAVE THE FOLLOWING INORMATION AVAILABLE:

* PRODUCT – _____
* SERIAL NUMBER - _____
* MODEL NUMBER - _____
TYPE - _____
* PART NUMBER WITH PAINT CODE
* PART DESCRIPTION

TELEPHONE - 1-800-222-8183
FAX - 1-660-747-8650

SWISHER MOWER & MACHINE CO. INC.
1602 CORPORATE DRIVE
P.O. BOX 67
WARRENSBURG, MO 64093

swisherinc.com