MANUFACTURING QUALITY LAWN CARE EQUIPMENT SINCE 1945

Owner's Manual

DT-40S
40" Tow Behind Dethatcher

Model No.
DT-40S

IMPORTANT
Read and follow all Safety Precautions and Instructions Before Operating this Equipment.

40" Tow Behind Dethatcher

1602 CORPORATE DRIVE PO BOX 67 WARRENSBURG, MISSOURI 64093
PH 660.747.8183 FAX 660.747.8650
www.swisherinc.com

16785 REV 00-000

The manufacturer's warranty to the original consumer purchaser is: This product is free from defects in materials and workmanship for a period of one (1) year from the date of purchase by the original consumer purchaser. We will repair or replace, at our discretion, parts found to be defective due to materials or workmanship. This warranty is subject to the following limitations and exclusions:

1) Commercial Use	The warranty period for any product used for commercial or rental is limited to ninety (90) days from the date of original purchase.
2) Limitations	This warranty applies only to products which have been properly assembled, adjusted, and operated in accordance with the instructions contained within this manual. This warranty does not apply to any product of Swisher Mower Co., Inc., that has been subject to alteration, misuse, abuse, improper assembly or installation, or shipping damage.
3) Exclusions	Excluded from this warranty are normal wear, normal adjustments, and normal maintenance.

In the event you have a claim under this warranty, you must return the product to an authorized service dealer. All transportation charges, damage, or loss incurred during transportation of parts submitted for replacement or repair under this warranty shall be borne by the purchaser. Should you have any questions concerning this warranty, please contact us toll-free at 1-800-222-8183. The model number, serial number, date of purchase, and the name of the authorized Swisher dealer from whom you purchased the product will be needed before any warranty claim can be processed.

THIS WARRANTY DOES NOT APPLY TO ANY INCIDENTAL OR CONSEQUENTIAL DAMAGES AND ANY IMPLIED WARRANTIES
ARE LIMITED TO THE SAME TIME PERIODS STATED HEREIN
FOR ALL EXPRESSED WARRANTIES.

Some states do not allow the limitation of consequential damages or limitations on how long an implied warranty may last, so the above limitations or exclusions may not apply to you. This warranty gives you specific legal rights and you may have other rights, which vary from state-to-state. This is a limited warranty as defined by the Magnuson-Moss Act of 1975.

SAFETY PRECAUTIONS & DECALS

This Safety Alert Symbol indicates important messages in this manual. When you see this symbol, carefully read the message that follows and be alert to the possibility of personal injury.

Read this manual completely. Failure to observe the following safety instructions could result in serious injury or death.

- Read the manual. Learn to operate this machine safely.
- Keep the operating speed LOW!!!!! Do not operate over 5 MPH (8KMH).
- Allow only responsible adults who are familiar with these instructions to operate this machine. Never allow children to operate this machine.
- Be sure the area is clear of other people before operating. Children are often attracted to the machine and the operating activity. **Never assume that children will remain where you last saw them.** Keep children under the watchful care of another responsible adult.
- Watch for traffic when operating near or crossing roadways.
- Do not operate the attachment if it has been dropped or damaged in any manner. Repair as necessary.
- Stop and inspect the equipment if you strike an object. Repair if necessary, before restarting.
- Dress properly. Do not operate when bare foot or wearing open sandals.
- Do not operate the machine while under the influence of alcohol or drugs.
- Never tamper with safety devices. Check their proper operation regularly.
- Operate attachments up and down slopes. There is a significant risk of overturns when operating across slopes.
- **Never make adjustments or repairs with the ATV engine running.**

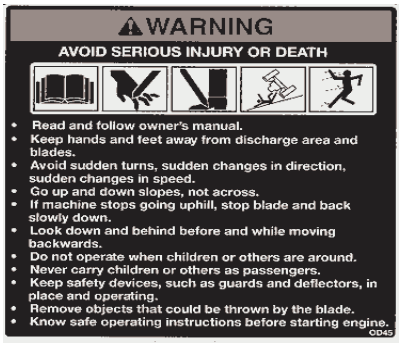

OD45 Warning Decal

OD55 Danger Decal

Parts List - P/N DT-40S

Any items not identified on this page are shown in detail on the following pages.

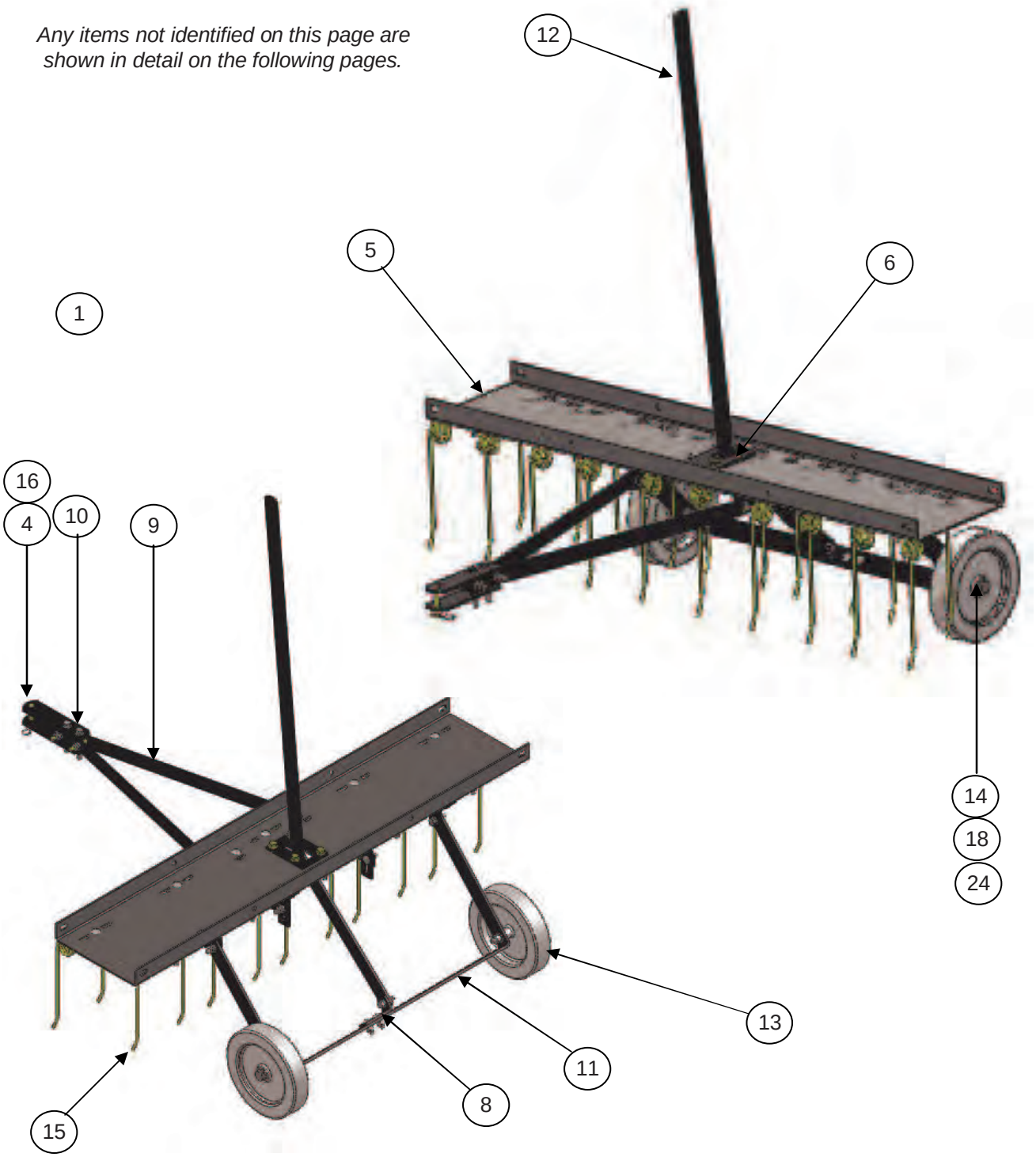

For Questions, Comments, or Parts Please Call:
1-800-222-8183
Or Visit:
www.Swisherinc.com

Parts List - P/N DT-40S

ITEM NO.	QTY.	PART NO.	DESCRIPTION
1	14	10197	CARRIAGE BOLT – 5/16-18 X 1
2	6	10216	CARRIAGE BOLT – 5/16-18 X 3/4
3	5	10548	BOLT – 5/16-18 X 1 SERRATED FLANGE
4	1	16618	CLEVIS PIN – 5/16 X 2
5	1	16622TK	BASE
6	1	16623TK	LIFT PLATE
7	4	16658TK	ARM PIVOT BRACKET
8	3	16659TK	HITCH ARM MOUNT BRACKET
9	2	16660TK	HITCH MOUNT ARM
10	2	16661TK	HITCH BRACKET
11	1	16662TK	AXLE BRACKET
12	1	16663TK	LIFT HANDLE
13	2	16664	WHEEL, 7 X 1.5
14	2	16665	SHOULDER BOLT – 3/8
15	10	16666	SPRING TINE
16	1	NB127	# 3 HAIR PIN
17	33	NB181	5/16-18 NYLOCK NUT
18	2	NB182	3/8-16 NYLOCK NUT
19	2	NB272	3/8 FLAT WASHER
20	33	NB275	5/16 FLAT WASHER
21	2	NB515	BOLT – 5/16-18 X 1 3/4 SERRATED FLANGE
22	4	NB596	BOLT – 5/16-18 X 3/4 SERRATED FLANGE
23	2	NB622	BOLT – 5/16-18 X 2 1/4 SERRATED FLANGE
24	2	NB177	1/2 FLAT WASHER

For Questions, Comments, or Parts Please Call:
1-800-222-8183
Or Visit:
www.Swisherinc.com

Assembly Details and Procedures

ASSEMBLY INSTRUCTIONS:

(1) Unpack your DT-40S kit and become familiar with each component. Read these assembly instructions thoroughly once before you begin.

(2) You will need some hand tools to assemble this product:

- 1/2” Wrench
- 1/2” Socket
- Ratchet
- Ratchet Extension
- 3/4” Wrench
- 3/4” Socket
- 9/16” Wrench
- 9/16” Socket
- Rubber Mallet
- Flat Screwdriver
- Gloves
- Safety Glasses

(3) Begin by opening your kit and laying out and identifying all of the parts as shown:

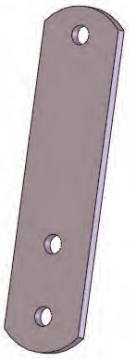

16661TK x 2

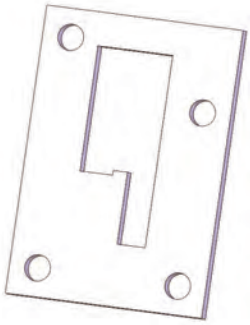

16623TK x 1

16664 x 2

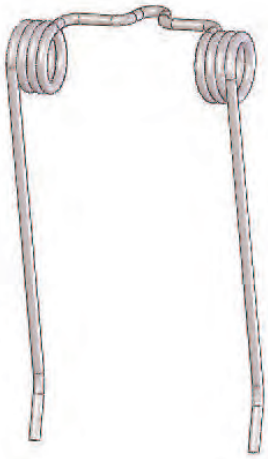

16666 x 10

10197 x 14

10216 x 6

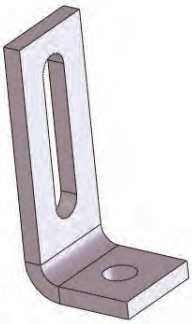

16659TK x 3

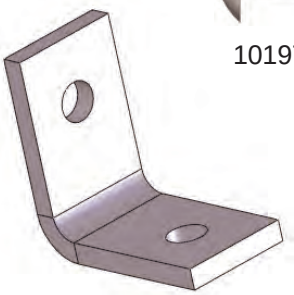

16658TK x 4

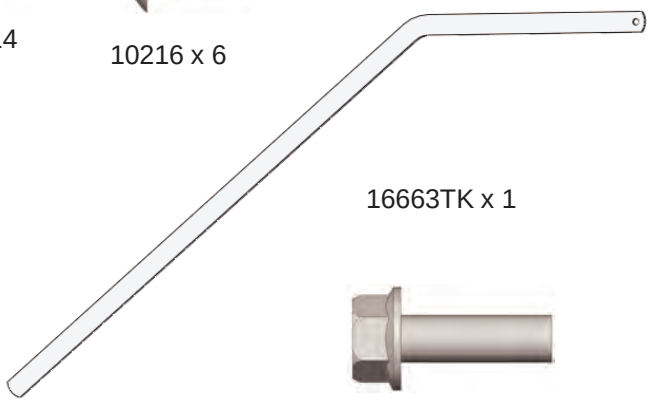

16663TK x 1

10548 x 5

For Questions, Comments, or Parts Please Call:
1-800-222-8183
Or Visit:
www.Swisherinc.com

Assembly Details and Procedures

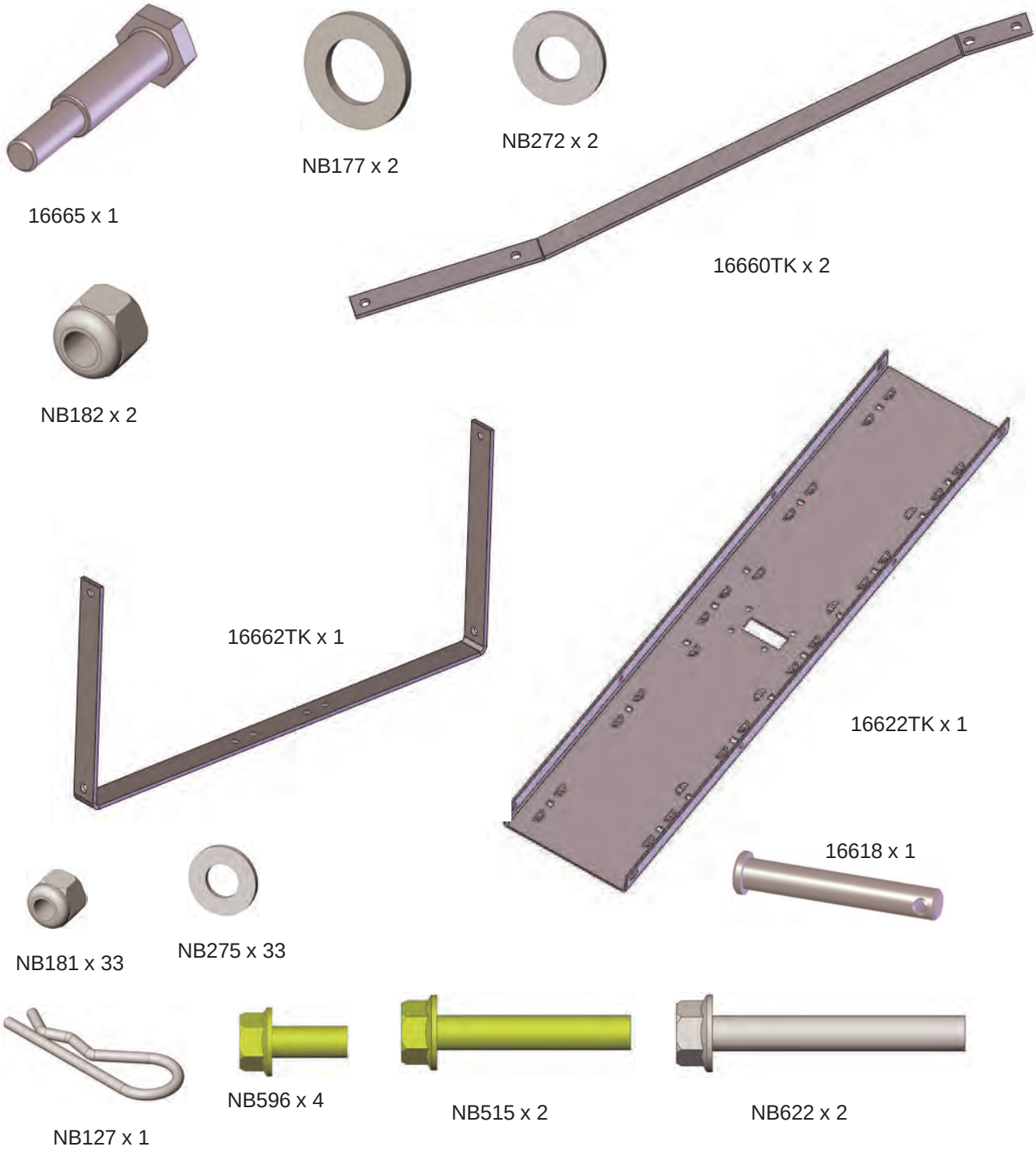

For Questions, Comments, or Parts Please Call:
1-800-222-8183
Or Visit:
www.Swisherinc.com

Assembly Details and Procedures

ASSEMBLY INSTRUCTIONS:

(4) Begin to assemble as show below. Carefully note the orientation of the spring tines in relation to the base. The stamped edges will engage the spring tines as shown. Repeat this procedure for all 10 spring tines. Securely tighten all fasteners.

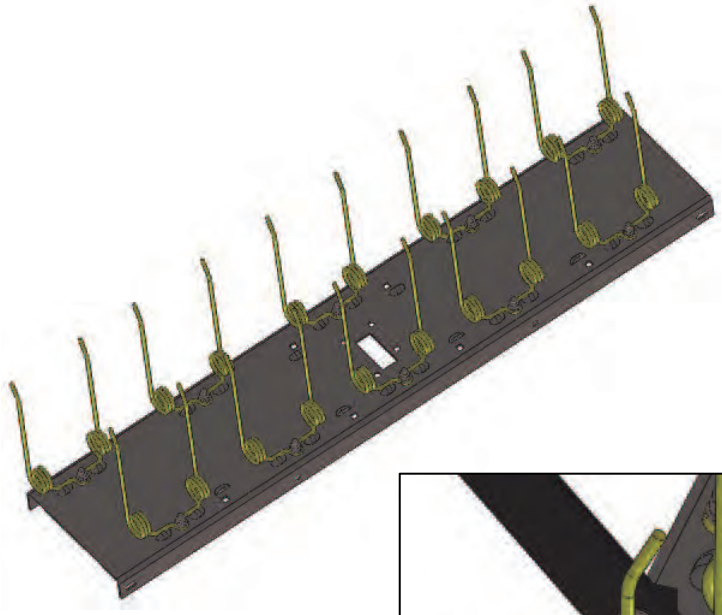

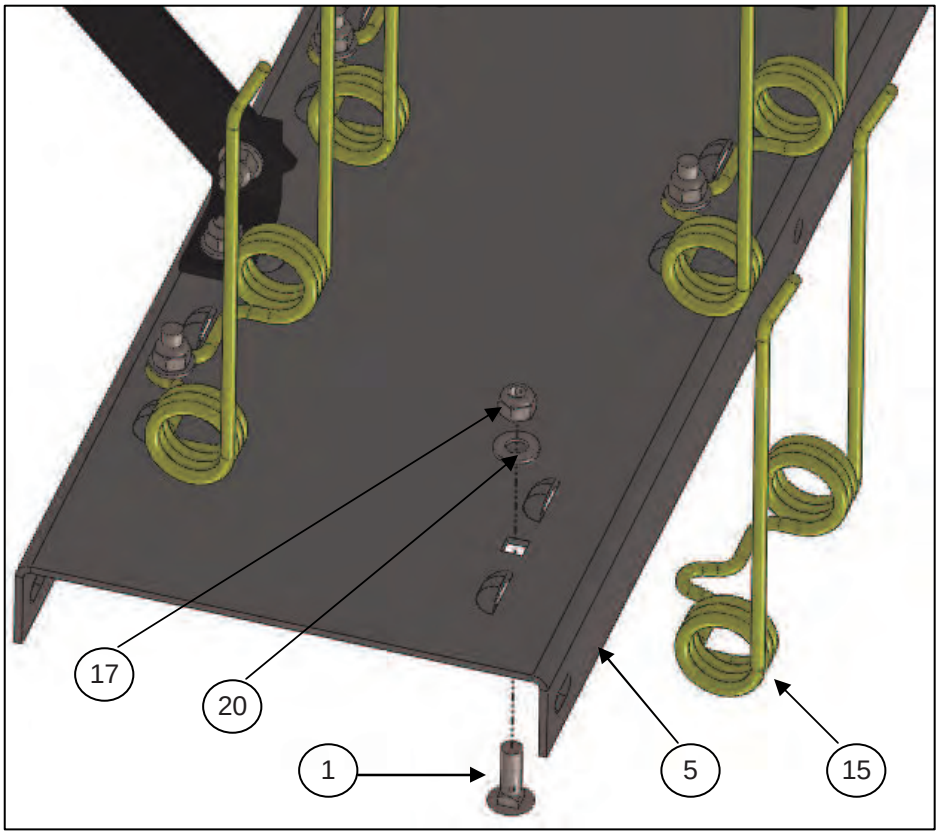

For Questions, Comments, or Parts Please Call:
1-800-222-8183
Or Visit:
www.Swisherinc.com

Assembly Details and Procedures

ASSEMBLY INSTRUCTIONS:

(5) Next, loosely assemble the tow hitch as show below. Note the orientation of the hitch in relation to the spring tines and base. Securely tighten all fasteners. (spring tines from previous step are not shown below for clarity)

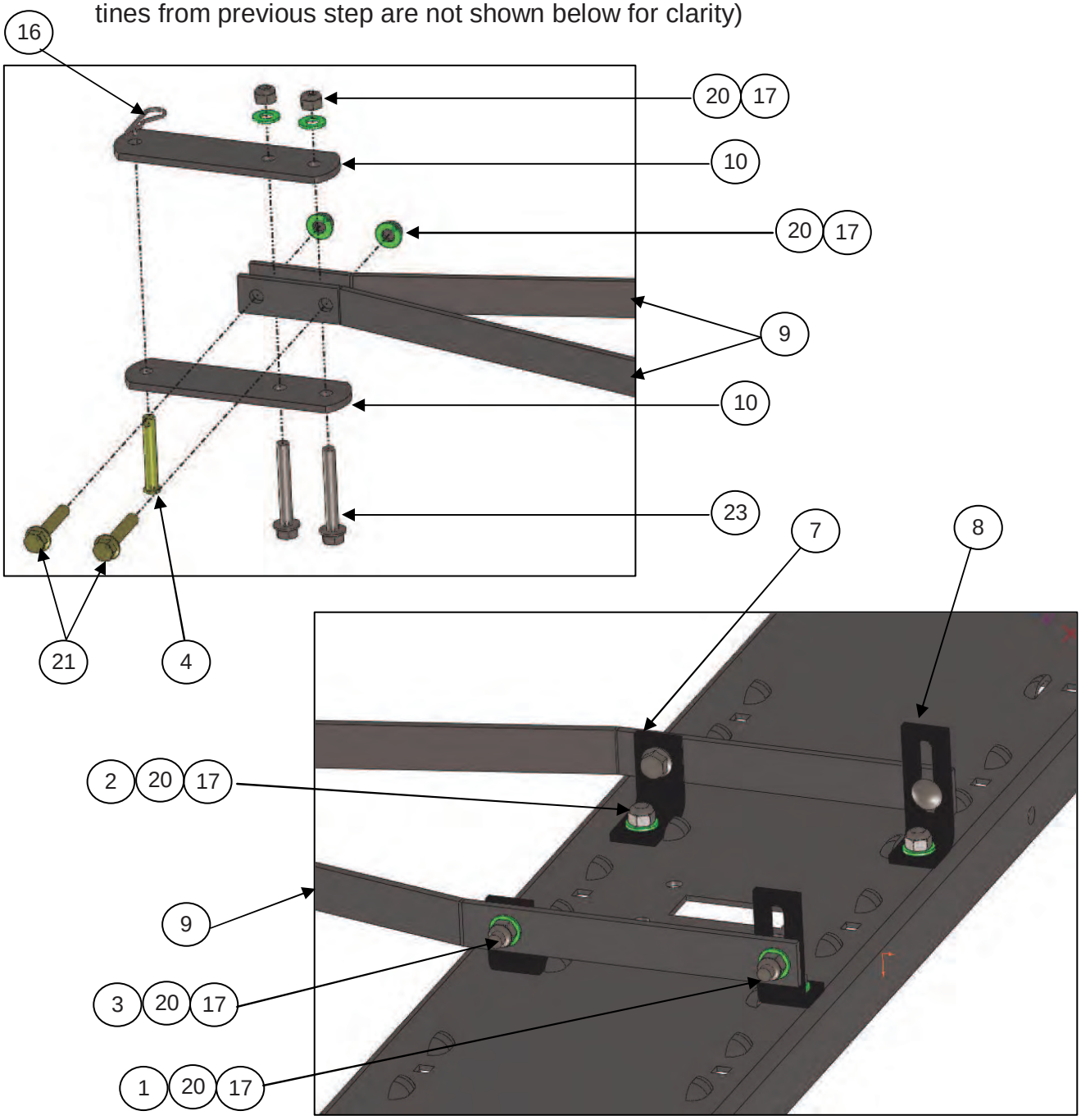

For Questions, Comments, or Parts Please Call:
1-800-222-8183
Or Visit:
www.Swisherinc.com

Assembly Details and Procedures

ASSEMBLY INSTRUCTIONS:

(6) Next, attach wheels to the axle bracket, the axle bracket to the base. Repeat for both sides.

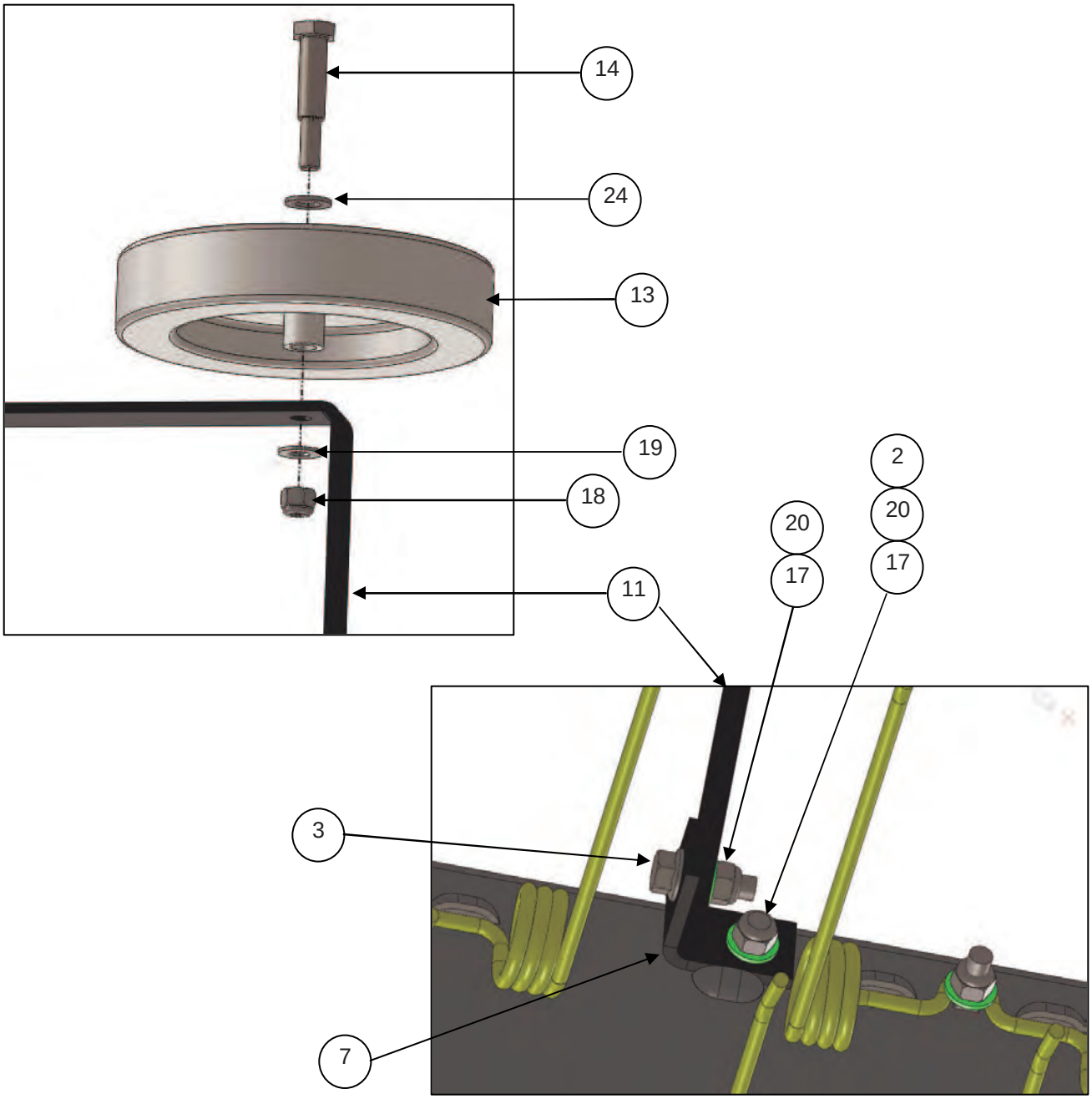

For Questions, Comments, or Parts Please Call:
1-800-222-8183
Or Visit:
www.Swisherinc.com

Assembly Details and Procedures

ASSEMBLY INSTRUCTIONS:

(7) Next, assemble the lift handle and lift gate. Securely tighten all fasteners.

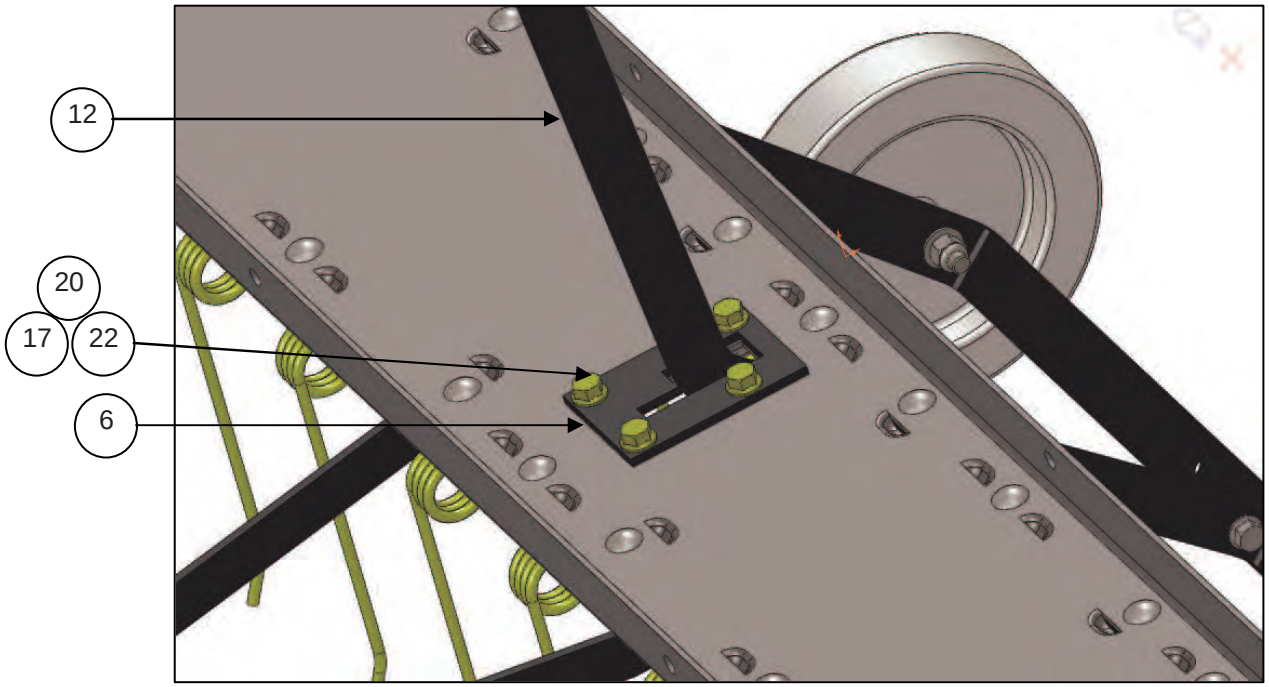

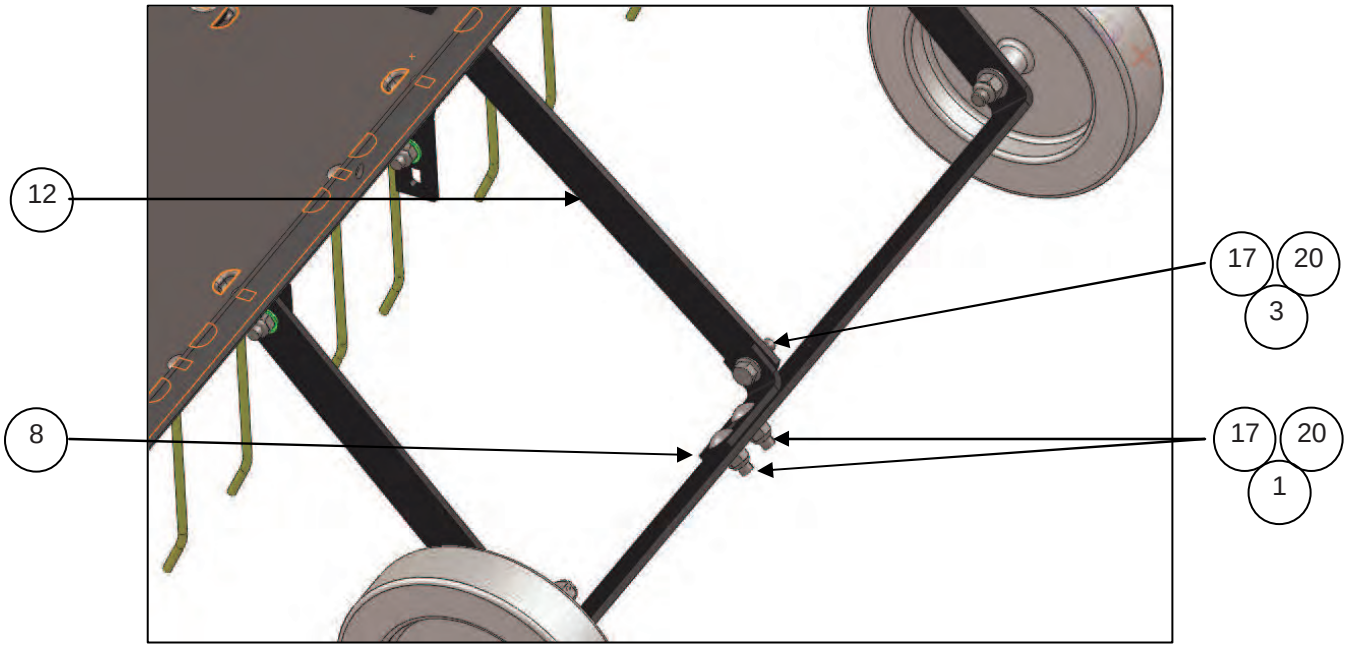

For Questions, Comments, or Parts Please Call:
1-800-222-8183
Or Visit:
www.Swisherinc.com

Assembly Details and Procedures

ASSEMBLY INSTRUCTIONS:

(8) Your assembly is now complete and ready to use!

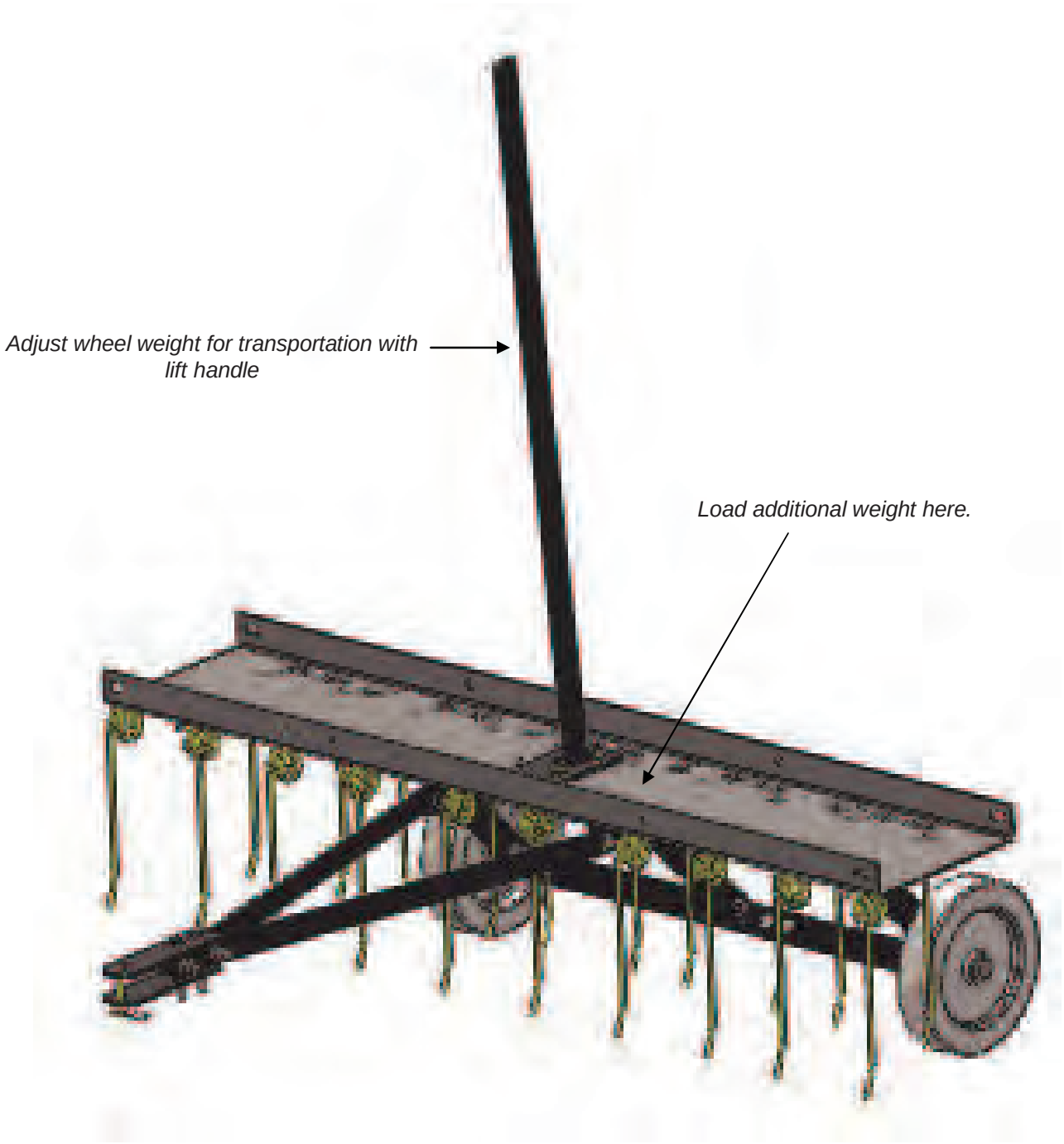

For Questions, Comments, or Parts Please Call:
1-800-222-8183
Or Visit:
www.Swisherinc.com

Notes:

For Questions, Comments, or Parts Please Call:
1-800-222-8183
Or Visit:
www.Swisherinc.com

Notes:

For Questions, Comments, or Parts Please Call:
1-800-222-8183
Or Visit:
www.Swisherinc.com

Notes:

For Questions, Comments, or Parts Please Call:
1-800-222-8183
Or Visit:
www.Swisherinc.com

MANUFACTURING QUALITY LAWN CARE EQUIPMENT SINCE 1945

Owner's Manual

DT-40S
40" Tow Behind Dethatcher

Model No.
DT-40S

IMPORTANT
Read and follow all Safety Precautions and Instructions Before Operating this Equipment.

WHEN ORDERING PARTS, PLEASE HAVE THE FOLLOWING INORMATION AVAILABLE:

* PRODUCT – _____
* MODEL NUMBER - _____
* PART NUMBER WITH PAINT CODE
* PART DESCRIPTION

TELEPHONE - 1-800-222-8183
FAX - 1-660-747-8650

SWISHER MOWER & MACHINE CO. INC.
1602 CORPORATE DRIVE
P.O. BOX 67
WARRENSBURG, MO 64093

Please Visit us on the Web at:

www.swisherinc.com