swisherinc.com

OWNER'S MANUAL

MODEL NO.

LS11528HPF
STARTING SERIAL #:
L110-165001

LS87522HPF
STARTING SERIAL #
L110-165001

IMPORTANT
Read and follow all Safety Precautions and Instructions before operating this equipment.

Rev. 11-048

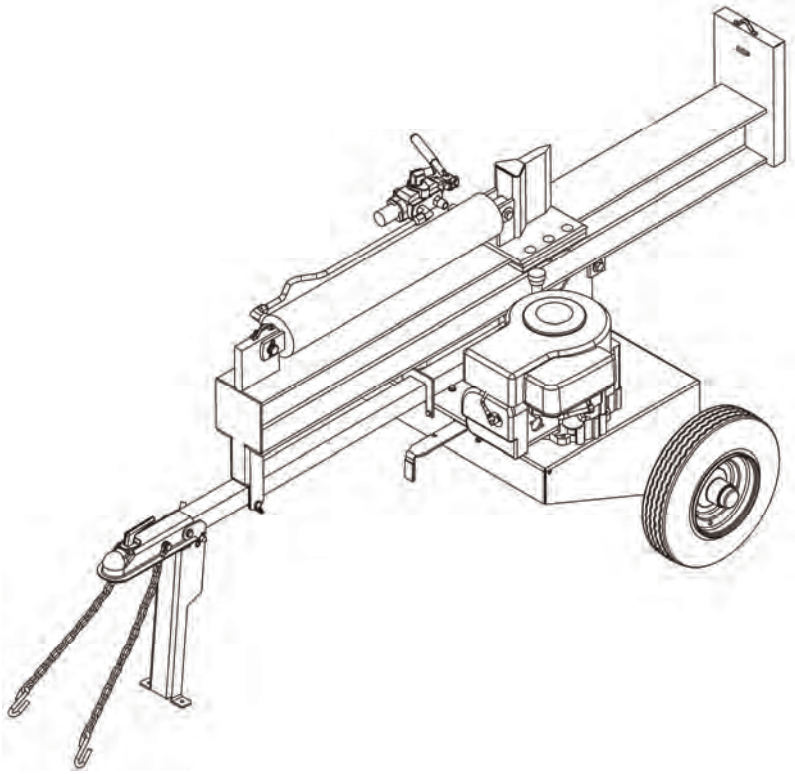

Model LS87522HPF shown

LOG SPLITTER

Safety
Assembly
Operation
Service and Adjustment
Repair Parts

1602 CORPORATE DRIVE, WARRENSBURG MISSOURI 64093
PHONE 660-747-8183 FAX 660-747-8650

Manufacturing quality lawn care equipment since 1945

Made In The USA

18166

LIMITED WARRANTY

The manufacturer's warranty to the original consumer purchaser is: This product is free from defects in materials and workmanship for the period's shown below beginning from the date of purchase by the original consumer purchaser. We will repair or replace, at our discretion, parts found to be defective due to materials or workmanship. This warranty is subject to the following limitations and exclusions:

Engine Warranty	All engines utilized on our products have a separate warranty extended to them by the individual engine manufacturer. Any engine service difficulty is the responsibility of the engine manufacturer and in no way is Swisher, or its agents responsible for the engine warranty. Engine warranty and contact information is as shown in the engine owners manual.
Hydraulic System	1 Year
Steel Components	3 Years
Commercial Use	The warranty period for this product when used for commercial or rental is limited to ninety (90) days from the date of original purchase.
Limitation	This warranty applies only to products which have been properly assembled, adjusted, and operated in accordance with the instructions contained within this manual. This warranty does not apply to any product of Swisher that has been subject to alteration, misuse, abuse, improper assembly or installation, shipping damage, or to normal wear of product.
Exclusions	Excluded from this warranty are normal wear items, normal or routine adjustments, and normal or routine maintenance.

In the event you have a claim under this warranty, you must return the product to an authorized service dealer. All transportation charges, damage, or loss incurred during transportation of parts submitted for replacement or repair under this warranty shall be borne by the purchaser. Should you have any questions concerning this warranty, please contact us toll-free at 1-800-222-8183. The model number, serial number, date of purchase, and the name of the authorized Swisher dealer from whom you purchased the splitter will be needed before any warranty claim can be processed.

THIS WARRANTY DOES NOT APPLY TO ANY INCIDENTAL OR CONSEQUENTIAL DAMAGES AND ANY IMPLIED WARRANTIES ARE LIMITED TO THE SAME TIME PERIODS STATED HEREIN FOR ALL EXPRESSED WARRANTIES. Some states do not allow the limitation of consequential damages or limitations on how long an implied warranty may last, so the above limitations or exclusions may not apply to you. This warranty gives you specific legal rights and you may have other rights, which vary from state-to-state. This is a limited warranty as defined by the Magnuson-Moss Act of 1975.

TABLE OF CONTENTS

WARRANTY……...….2
SAFETY..…….3-4
TOWING..……..……..5
OPERATION……6-8
MAINTENANCE.…….8
DECALS…..…….…….9
PARTS BREAKDOWN…….10-14
SPECIFICATIONS..……17

SAFETY PRECAUTIONS

This Safety Alert Symbol indicates important messages in this manual. When you see this symbol, carefully read the message that follows and be alert to the possibility of personal injury.

Read this manual completely. This machine can amputate hands, feet, and throw objects. Failure to observe the following safety instructions could result in serious injury or death.

WARNING: The engine exhaust from this product contains chemicals known to the state of California to cause cancer, birth defects or other reproductive harm.

DANGER: Your log splitter was built to be operated according to the rules for safe operation in this manual. As with any type of power equipment, carelessness or error on the part of the operator can result in serious injury. If you violate any of these rules, you may cause serious injury to yourself or others.

- Read and understand the manual. Learn to operate this equipment in a safe manner. Familiarize yourself with all of the controls in a safe environment before starting to work with this machine.
- DO NOT under any circumstances alter this log splitter. This equipment was designed and engineered in accordance with operating instructions. Altering this equipment, or using this equipment in such a way as to circumvent its design capabilities and capacities, could result in serious injury or fatality and WILL VOID THE WARRANTY.
- Allow ONLY responsible adults who have read this manual to operate this machine. NEVER allow children to operate this machine.
- NEVER operate or allow someone to operate this equipment while under the influence of alcohol, drugs or medication. Being coherent is essential for safety.
- ALWAYS use outdoors with adequate ventilation. DON'T run the engine in an enclosed area. Exhaust gases contain carbon monoxide. This odorless gas can be deadly when inhaled.
- NEVER use splitter for any other purpose than splitting wood. Any other use can result in injury. Your splitter is a precision piece of power equipment, not a toy. Therefore, exercise extreme caution at all times.
- ONLY a single operator is to load and operate the log splitter. KEEP all others, including pets and children, a minimum of 20 feet away from your work area. More accidents occur when more than one person operates the log splitter than any other time.
- ALWAYS wear protective gear such as safety goggles, protective hearing device, steel-toed shoes, and tight-fitting gloves without drawstrings or loose cuffs.
- NEVER wear loose clothing or jewelry that can be caught by moving parts of the splitter and pull you into it. Keep hair away from moving parts.
- NEVER operate your splitter on wet, muddy, or icy surfaces. KEEP work area clean of split wood. Safe footing is essential in preventing accidents.
- ONLY operate splitter on level ground with wheels blocked, not on the side of a hill. It could tip, or rolling logs, poor footing, etc. could cause an accident.

SAFETY PRECAUTIONS

- NEVER operate your splitter near a flame or spark. Hydraulic oil and gasoline are flammable and can explode.

- NEVER fill gas tank while the engine is hot or running. Allow the engine to cool before refueling.

- This unit is equipped with an internal combustion engine and should not be used on or near any unimproved forest-covered, brush-covered or grass-covered land unless the engine's exhaust system is equipped with a spark arrester meeting applicable local or state laws (if any). If a spark arrester is used it should be maintained in effective working order by the operator.

-NOTE-

In the state of California, the above is required by law (Section 442 of the California Public Resources Code). Other states may have similar laws. Federal laws apply on federal lands. A spark arrester muffler (optional by manufacturer) is available at your nearest engine dealer. Check legal requirements in your area.

- ONLY use your hands to operate the control lever. NEVER use foot, knee, rope or any extension device.

- Split ONLY one log at a time. NEVER attempt to split two logs on top of each other.

- NEVER place hands or feet between log and splitting wedge or between log and ram during forward or reverse stroke. ALWAYS keep fingers clear of splits that open in log during splitting operation.

- DO NOT straddle or reach across the splitting area while operating the splitter.

- DO NOT step over splitter when the engine is running. You may trip or accidentally activate the splitting wedge. Walk around to get to the other side.

- NEVER attempt to load splitter while splitting wedge is in motion. When loading log splitter, place hands on the sides of the log, not the ends.

- NEVER attempt to split woods across the grain. Wood may burst or fly out of your splitter and result in serious injury.

- NEVER leave your splitter unattended with the engine running. Shut off the engine if you are leaving your splitter, even for a short period of time. Someone could accidentally activate the ram and be injured.

- Both ends of the log should be cut as squarely as possible to prevent the log from sliding out of the splitter during operation. Log length should be kept to 25 1/2" or less.

- NEVER operate your splitter while it is attached to the tow vehicle.

- BEFORE towing, be certain that the splitter is securely attached to the towing vehicle and that the support leg, beam and cylinder are secured in there respective towing positions.

- NEVER allow persons to ride on splitter. DO NOT carry any cargo or wood on your splitter. It may fall off and cause an accident.

- DO NOT loosen or remove any hydraulic fitting, line or reservoir cap while your splitter or engine is running.

- Fluid escaping from a very small hole can almost be invisible. DO NOT check for leaks with your hand. See maintenance section for instructions. **IF injured by escaping fluid, see a doctor at once. Serious infection or reaction can develop if proper medical treatment is not administered immediately.**

- DO NOT operate your splitter in poor mechanical condition or when it is need of repair.

- ALWAYS disconnect the spark plug wire and place the wire where it cannot contact the spark plug, to prevent accidental starting the engine when setting up, transporting, adjusting or repairing.

TOWING SAFETY

- Do not allow persons to ride on splitter. Do not carry any cargo or wood on your splitter. It may fall off and endanger vehicles that are following you.

- Be sure support leg is in the travel position and coupling secure. This must also be retracted so not to interfere while towing. Retract support leg by removing pin, pivoting up, and replacing pin.

- Never exceed 45 MPH while towing your splitter. Be extra cautious when traveling over rough terrain, especially over railroad tracks.

- Always be careful while backing your splitter. You could jackknife your log splitter if not careful.

- Before using splitter, disconnect it from tow vehicle. A log could easily be push forward into the vehicle.

- See tire and wheel specifications for PSI while towing.

- Be aware of the extra length of splitter while turning, parking, crossing intersect and in all driving situations.

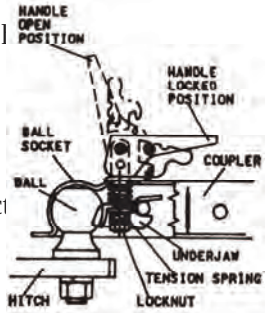

OPERATION INSTRUCTIONS
POSI-LOCK COUPLER

ADJUST COUPLER LOCKING PRESSURE ON BALL BEFORE USE. PLACE HANDLE IN LOCKED POSITION WITH BALL IN COUPLER. TIGHTEN LOCKNUT AGAINST TENSION SPRING SO THAT COUPLER IS NOT LOOSE ON BALL. CORRECT ADJUSTMENT WILL ALLOW HANDLE TO BE RELEASED WITH MODERATE PRESSURE APPLIED TO HANDLE.

TO OPEN, PULL UP ON COUPLER HANDLE AND ROTATE FORWARD. PLACE COUPLER ON BALL WHEN BALL IS COMPLETELY NESTED IN BALL SOCKET, ROTATE COUPLER HANDLE BACKWARD UNTIL HANDLE IS IN LOCKED POSITION.

AFTER TOWING FOR 50 MILES, CHECK COUPLER FOR TIGHTNESS ON BALL. ALWAYS CHECK TIGHTNESS BEFORE TOWING. BE SURE COUPLER HANDLE IS IN LOCKED POSITION.

WARNING:

NEVER EXCEED WEIGHT CAPACITY AND ALWAYS USE SAFETY CHAINS. ALWAYS USE CORRECT BALL SIZE, MAKING SURE BALL IS COMPLETELY INSERTED INTO COUPLER. LOCK COUPLER HANDLE SECURELY BEFORE TOWING. ALWAYS CHECK FOR DAMAGES AND REPLACE IF DAMAGED. AVOID SHARP TURNS AND STEEP VERTICAL ANGLES WHEN TOWING.

ASSEMBLY

This log splitter has been mostly assembled at the factory. Refer to uncrating and assembly instructions to complete the final assembly step. Refer to the drawings and part lists should it become necessary to disassemble the unit for repair or replacement of parts.

Inspect all components for damage. If you believe you have a damaged part please contact customer service immediately at 1-800-222-8183.

WARNING: Exercise extreme caution, as parts are very heavy. Sufficient persons or mechanical handling equipment should be used.

OPERATION

INTENDED USE: This log splitter is intended and designed to only split wood. NEVER use for any other purposes. Doing so can cause injury or VOID THE WARRANTY.

IMPORTANT: This unit is shipped with oil but without gasoline in the engine. After assembly, see separate Engine Manual for proper fuel and oil recommendations.

WARNING: *DO NOT START OR RUN THE LOG SPLITTER WITHOUT OIL IN THE ENGINE AND HYDRAULIC RESERVOIR.*

FILLING THE HYDRAULIC RESERVOIR

Fill the hydraulic reservoir to within the hydraulic operating range as marked on the tank with general-purpose automatic transmission fluid or general-purpose hydraulic fluid. After the hydraulic reservoir and the engine crankcase are filled correctly with their respective oils, start the engine. Remember to set the throttle and turn on the fuel shut-off valve. The hydraulic pump should prime itself. With the engine running, move the hydraulic valve lever toward the wedge. This will cause the cylinder to extend and expel air. When the cylinder is fully extended, retract it. Repeat this procedure several times. (An erratic movement of the cylinder indicates that there is air in the system). Once the cylinder has a smooth and constant speed indicating that all air has been expelled, add fluid until the level is within the indicated range as marked on the tank.

START UP

WARNING: ***DO NOT START OR RUN THE LOG SPLITTER WITHOUT OIL IN THE ENGINE AND HYDRAULIC RESERVOIR.***

See separate Engine Manual for fuel and oil recommendations. If applicable your log splitter has come equipped with a fuel shut-off valve for towing purposes.

Before starting engine make sure crankcase is filled correctly with oil and the proper fuel has been used. The engine will only start when the throttle lever and fuel shut-off valve if applicable are turned to their ON positions.

STARTING INSTRUCTIONS

See Engine Manual

COLD WEATHER START UP

The Cold Weather Clutch enables the engine to be started without having to pull through cold, thickened hydraulic fluid. Simply push the handle into locked position. Start engine, let it warm up, and release Cold Weather Clutch.

OPERATION

SPLITTER OPERATION

1. Set up the log splitter in a clear, level area and block the wheels. The suction port on the tank should always be on the lower side of the log splitter.
2. Place a log on the beam, against the foot plate. Make sure the log is securely on the foot plate and up against the beam.
3. Depress the valve lever so that the cylinder will drive the push block into the log. Extend the cylinder until the log splits or to the end of its stroke. If the log has not completely split after the cylinder has reached the end of its extension, retract the cylinder. NOTE: Leaving the valve in the "actuate" position at the end of the stroke may damage the pump. Always use extra care when splitting logs with ends that are not square.

NOTE: To extend the life of the hydraulic cylinder, avoid "BOTTOMING OUT" the cylinder.

TOWING SAFETY

This unit should not be towed on any street, highway, or public road without checking the existing federal, local, and state laws. Any licensing or modifications such as taillights, etc., need to comply with existing federal, local, or state vehicle requirements is the sole responsibility of the purchaser. Obey all regulations when towing on public roads and highways. See also **SAFETY PERCAUTIONS**.

Turn the fuel shut-off valve if applicable OFF to prevent flooding of the engine while traveling.

Be careful when backing up. You can easily jack-knife your splitter.

TOWING AT NIGHT

The requirements for taillights are based on States regulations. Some states allow towing at night as long as the towed equipment does not visibly impair the tow vehicle taillights. This is based on a state, to state requirements. The customer is responsible for meeting the states requirements.

If a "Statement of Origin" is required in your state, see your local dealer to receive one.

HYDRAULIC SAFETY

The hydraulic system on your splitter requires careful inspection along with the mechanical parts. Be sure to replace any frayed, kinked, cracked or otherwise damaged hydraulic components. Just because it isn't leaking today doesn't mean that it will not fail tomorrow.

Fluid escaping from a very small hole can almost be invisible. Do not check for leaks with your hand. Escaping fluid under pressure can have sufficient force to penetrate skin causing serious personal injury or even death. Leaks can be detected by passing a piece of cardboard or wood over the suspected leak and looking for discoloration. **IF injured by escaping fluid, see a doctor at once. Serious infection or reaction can develop if proper medical treatment is not administered immediately.**

Should it become necessary to loosen or remove any hydraulic fittings, lines or reservoir cap, be sure to relieve all pressure by shutting off the engine and moving the control handle back and forth several times.

NEVER remove the cap from the hydraulic tank or reservoir while the unit is running. Hot oil under pressure could result in serious injury. See also **SAFETY PERCAUTIONS.**

The pressure relief valve on your splitter is preset at the factory. DO NOT adjust the valve. Only a qualified technician should perform this adjustment.

MAINTENANCE & STORAGE

WARNING: *DISCONNECT THE SPARK PLUG BEFORE PERFORMING ANY MAINTENANCE.* Consult the operating and maintenance instructions of the engine manufacturer for engine care.

Always check the oil level of the hydraulic reservoir before operation. Operating without an adequate oil supply will cause severe damage to the pump. Change the hydraulic fluid in the reservoir after every 100 hours of operation. Change the hydraulic filter after every 50 hours of operation (use only a 10 micron hydraulic filter).

Periodically check that all nuts, bolts, screws, clamps and fittings are tight and secure.

To keep your splitter in top working condition perform all recommended maintenance procedures before you use your splitter.

If the wedge becomes dull or nicked a grinder or sharpening tool can be used to sharpen it.

Completely drain the fuel tank prior to storage. Always store gasoline in an approved, tightly sealed container. Store container in a dry, cool place with adequate ventilation. Keep fuel away from areas where fumes could contact open flame, pilot light or sparks.

Be aware of the environment when disposing of used petroleum products. Please dispose of used hydraulic fluid, engine oil and any by products from the maintenance of your splitter at approved recycling centers.

Should it become necessary to disassemble the unit for repair or replacement of parts, refer to the drawings and parts list on the following pages. Exercise extreme caution, as some parts are very heavy and will require sufficient persons or mechanical handling equipment.

Your Swisher Log Splitter has been produced with components designed specifically to this machine. Although standard springs, hardware and ect may look similar to parts used on other machinery, they may in some cases be made of a different construction and/or materials. All replacement parts must meet manufacturer's specifications.

The operation of any splitter can produce foreign objects to be thrown into the eyes, resulting in severe eye damage. Always wear certified safety glasses or wide-vision safety goggles over spectacles before staring any splitting machine and while operating such a machine.

The operation of any splitter produces sound waves that are damaging to the human ear. Ear protection is recommended.

SAFETY FIRST, QUALITY ALWAYS

SWISHER

A TRADITION OF QUALITY SINCE 1945

SAFETY DECALS

Replace decals immediately if damaged.

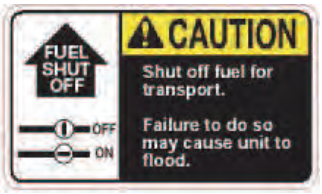

OD16 – FUEL SHUT OFF DECAL

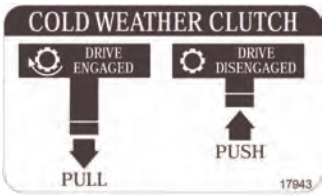

17943 – COLD WEATHER DECAL

12494 – HYDRAULIC FILL PLUG DECAL

12549 – DO NOT EXCEED 45 MPH DECAL

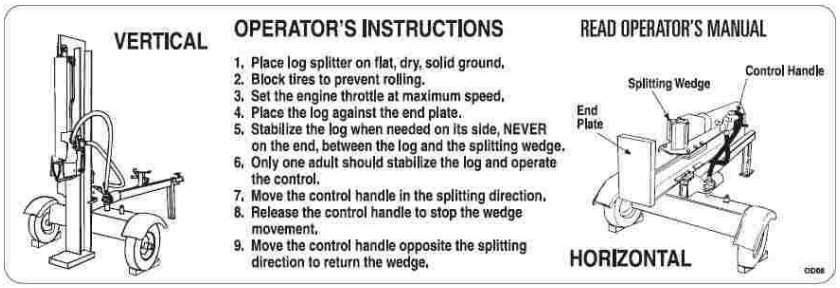

12492 – OPERATOR INSTRUCTION DECAL

11427 – DANGER DECAL

PARTS BREAKDOWN

ASSEMBLY DETAIL

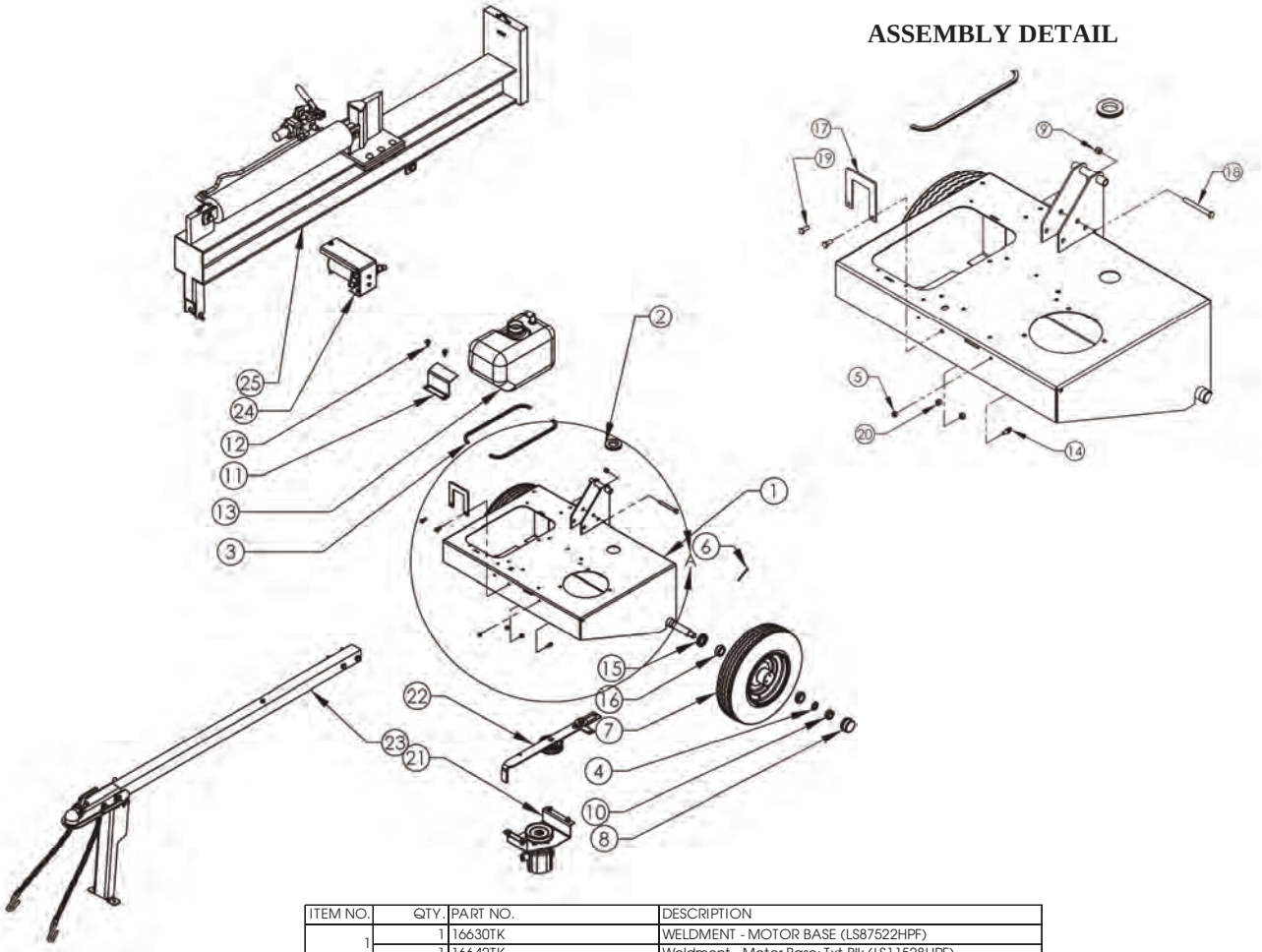

ITEM NO.	QTY.	PART NO.	DESCRIPTION
1	1	16630TK	WELDMENT - MOTOR BASE (LS87522HPF)
	1	16642TK	Weldment - Motor Base; Txt Blk (LS11528HPF)
2	1	12441	Grommet - Blk Neoprne 1 1/2X2 GDX3/32 GT
3	2	AS116	Protective Edge
4	2	NB179	Washer-3/4OD X 1 1/4OD 18 GA ZY
5	1	NB180	1/4-20 Nylok Nut
6	2	NB633	PIN - COTTER 1/8" X 2"(EXT PRONG CRBN STL)
7	2	7296	WHEEL/TIRE - W/ BEARINGS AND SEAL (4 PLY)
8	2	2203DC	Wheel Hub Dust Cover For WT7002A
9	1	NB182	3/8-16 NYLOC NUT
10	2	2203CN	Wheel Hub Castle Nut For WT7002A
11	1	16635TK	TANK - HOLD DOWN (LS87522HPF)
	1	17529TK	Tank - Hold Down; Txt Blk (LS11528HPF)
12	2	26X249	SCREW - .312-18 x .75
13	1	17618	TANK - 2.5 GAL WITH FITTINGS (LS87522HPF)
	1	17625	Tank - 5 Gallons with Fittings (LS11528HPF)
14	1	V139EB	1/4-20 X 3/4 Eye Bolt
15	2	2203S	Wheel Hub Bearing Seal For WT7002A
16	4	2203B	Wheel Hub Bearing For WT7002A
17	1	16634TK	GUIDE - TONGUE
18	1	NB649	BOLT - HEX, 3/8-16 X 3 1/2 GR5 ZP
19	2	NB578	BOLT - 5/16-18 X 3/4 GR5 ZP
20	2	NB181	5/16-18 NYLOC NUT
Not Shown	1	18134	Cap - Thread Vented, 2 1/2 Gal Tank (NOT SHOWN)
		18133	Cap - Thread Vented, 5 Gal Tank
21	1	PUMP ASSEMBLY	SEE DETAIL
22	1	IDLER ASSEMBLY	SEE DETAIL
23	1	TONGUE ASSEMBLY	SEE DETAIL
24	1	FILTER ASSEMBLY	SEE DETAIL
25	1	BEAM ASSEMBLY	SEE DETAIL
Not Shown	1	7346	Hose - Suction, 20"
		14921	Hose - Supply, 1" ID X 16-7/8" Long (LS11528HPF)
Not Shown	1	16637	Hose - Return, 3/4" X 18.5"
Not Shown	1	16067	Hose - Return, 3/4 X 55
Not Shown	1	7289	Hose - Hyd. 48"

PARTS BREAKDOWN

IDLER DETAIL

ITEM NO.	QTY.	PART NO.	DESCRIPTION
1	1	16626	Idler, Sliding / Cold Weather
2	1	2077	HANDLE GRIP, PIVOT
3	1	NB107	3/8-16 X 1 1/2 HCCG
4	1	NB272	3/8 SAE WASHER
5	1	NB182	3/8-16 NYLOC NUT
6	1	B527	Idler Pulley OD-3.25", ID-3/8"
7	2	6037	IDLER BUSHING
8	1	NB280	NUT - LOCKING, 2 WAY 3/8-16 & WAS GR A
9	1	6040	IDLER SPACER
10	1	NB302	Bolt - 3/8-16 X 1 3/4 HCC GR5 ZY

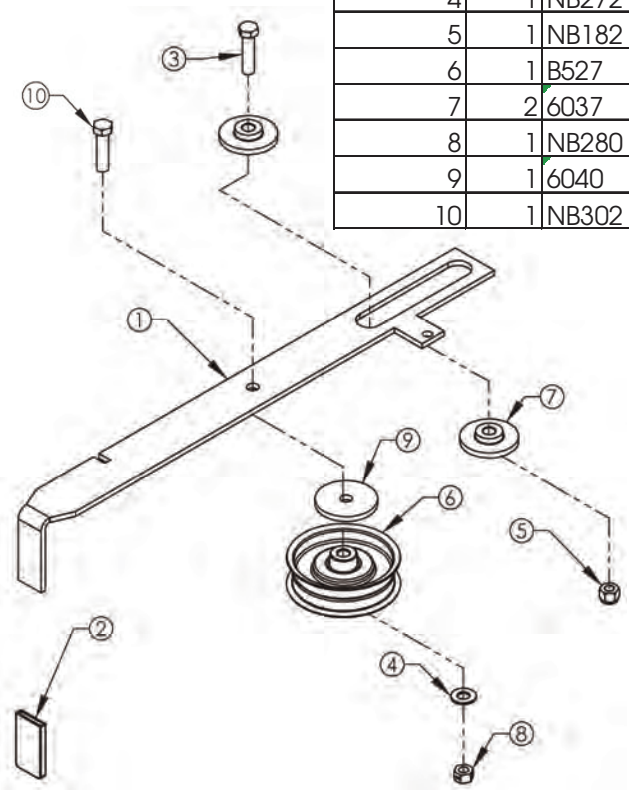

PUMP DETAIL

ITEM NO.	QTY.	PART NO.	DESCRIPTION
1	1	16625TK	Mount - Pump; Textured Black (LS87522HPF)
	1	16641TK	Mount - Pump; Txt Blk (LS11528HPF)
2	1	17904	HYDRAULIC PUMP (LS11528HPF)
	1	16254	HYDRAULIC PUMP (LS87522HPF)
3	8	NB596	BOLT - 5/16" X 18 UNC X .75" FLANGE HEAD
4	8	NB170	NUT - 5/16-18 SERR FLANGE
5	1	7306	Pulley- Pump 4.25"
6	1	NB312	5/16-18 X 1/2 SSC With Loctite H
7	1	024002	KEY WOODRUFF 3

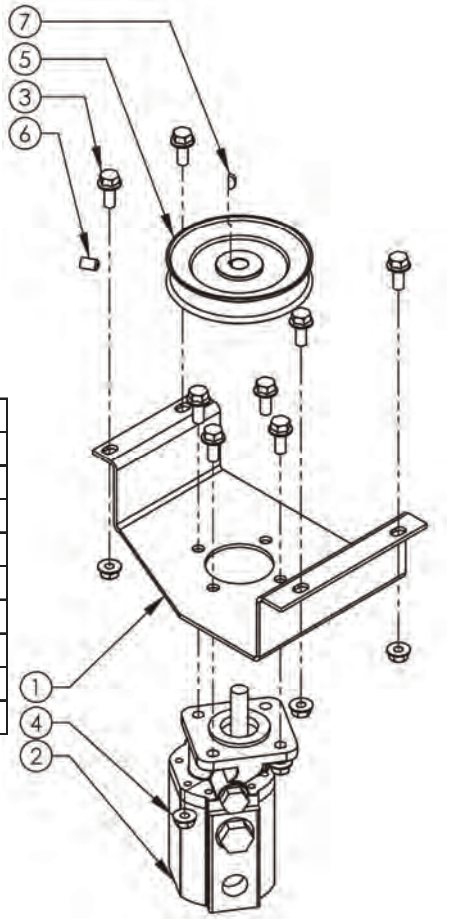

PARTS BREAKDOWN

NOTE: The directional flow arrows on the filter head (LS1112) should be pointing away from the hydraulic tank on the 22 Ton models.

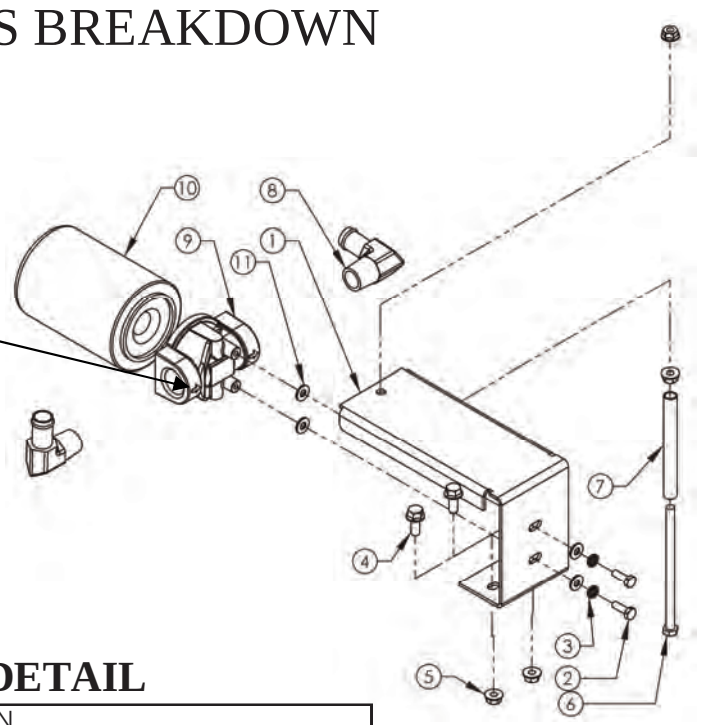

FILTER DETAIL

ITEM NO.	QTY.	PART NO.	DESCRIPTION
1	1	17627	MOUNT - FILTER
2	2	NB250	1/4-20 X 3/4 GR5 ZP
3	2	NB135	Washer - 1/4 Split Lock, Medium Duty
4	2	NB596	BOLT - 5/16" X 18 UNC X .75" FLANGE HEAD
5	4	NB170	NUT - 5/16-18 SERR FLANGE
6	1	NB521	5/16-18X5.5 HCC GR5 ZP
7	1	17595	SPACER - FILTER GUARD
8	2	7329	Fitting Return Line (4501-12-12)
9	1	LS1112	HEAD-FILTER (FFC3012NXXR4X)
10	1	LS1113	Element-Filter (FPE30-25N)(BT839)
11	4	NB274	1/4 SAE WASHER

VALVE DETAIL

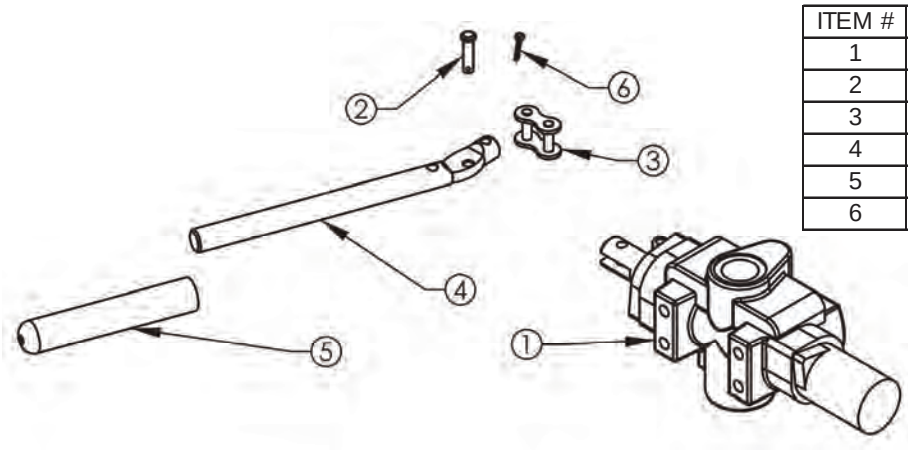

ITEM #	QTY.	PART #	DESCRIPTION
1	1	7287TK	Valve Control Splitter
2	1	NB522	1/4 X 1 CLEVIS PIN
3	1	7424	Master Link
4	1	7423	HANDLE VALVE
5	1	7425	Valve Handle Grip
6	1	NB-597	3/32 X 3/4 COTTER PIN

PARTS BREAKDOWN

BEAM DETAIL

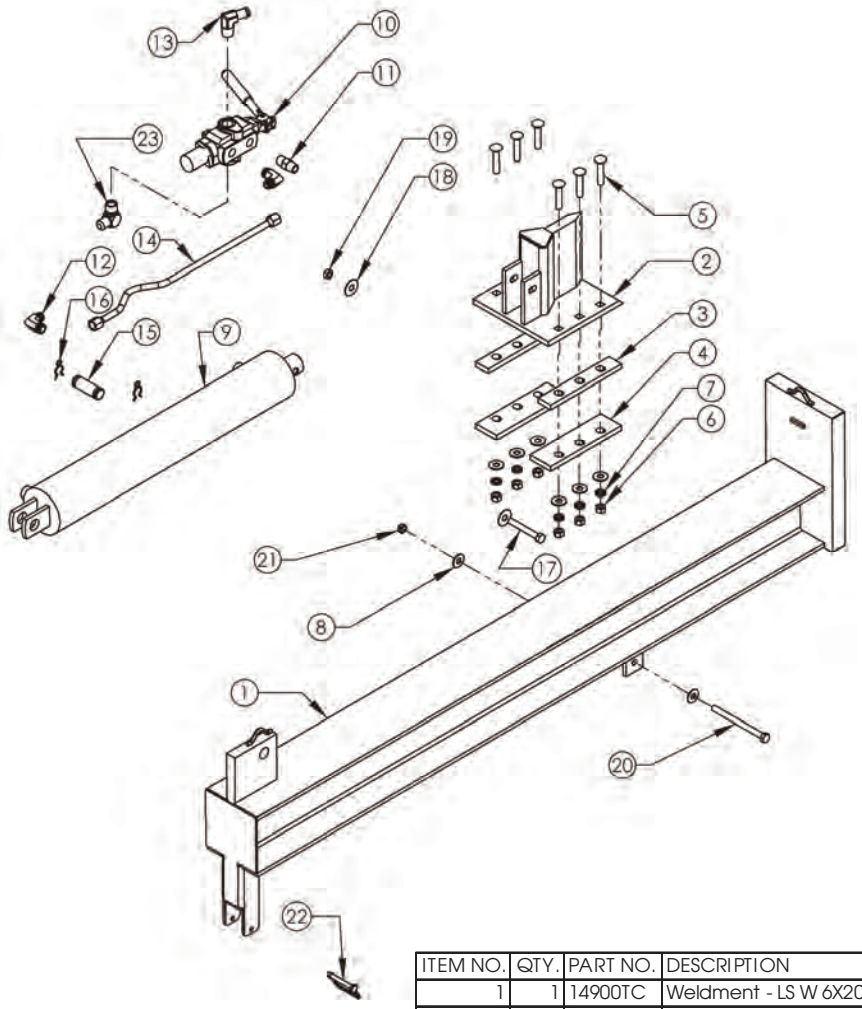

ITEM NO.	QTY.	PART NO.	DESCRIPTION
1	1	14900TC	Weldment - LS W 6X20 I- Beam
2	1	14622TK	WEDGE WELDMENT - LOG SPLITTER
3	2	14619TK	SPACER - WEDGE, LOG SPLITTER
4	2	14620TK	PLATE - WEDGE BOTTOM, LOG SPLITTER
5	6	NB643	BOLT - CARRIAGE 1/2-13 X 2 1/2 GR5 ST ZY
6	6	NB213Z	NUT - 1/2-13 GR2 ZP
7	6	NB508	500 LOCK WASHER
8	8	NB555	1/2 USS Flat Washer ZP
9	1	7284TK	CYLINDER 4" X 24" X 1 3/4" (LS87522HPF)
	1	7354TK	Cylinder - 4 1/2 X 24 X 1.75, Painted (LS11528HPF)
10	1	7287TK	Valve Control SplitterAssy
11	1	7292	Pipe Nipple 24SA-08
12	2	7291	ELBOW - HYDRAULIC 1/2 X 1/2 THREAD ZY
13	1	7329	Fitting Return Line (4501-12-12)
14	1	7288TK	Line Assembly -Stationary
15	1	7293	Pin- Cylinder to Beam
16	2	NB642	COTTER - HAIRPIN #23-09 .093 X 1 13/16
17	1	12669	BOLT - 1/2-13 X 3 1/4 GR8 ALLOY ZY
18	2	TR150W	Washer, Front Wheel (Heat Trtd)
19	1	NB121	1/2-13 2-Way Jam Lock Nut
20	1	NB151	Bolt - 1/2-13 X 6 HCC GR5 ZP
21	1	NB688	Nut - 1/2 -13 Nyloc, Jam
22	1	H11	Safety Hitch Pin
23	1	7387	Fitting Valve Inlet 849FS10X12

TONGUE DETAIL

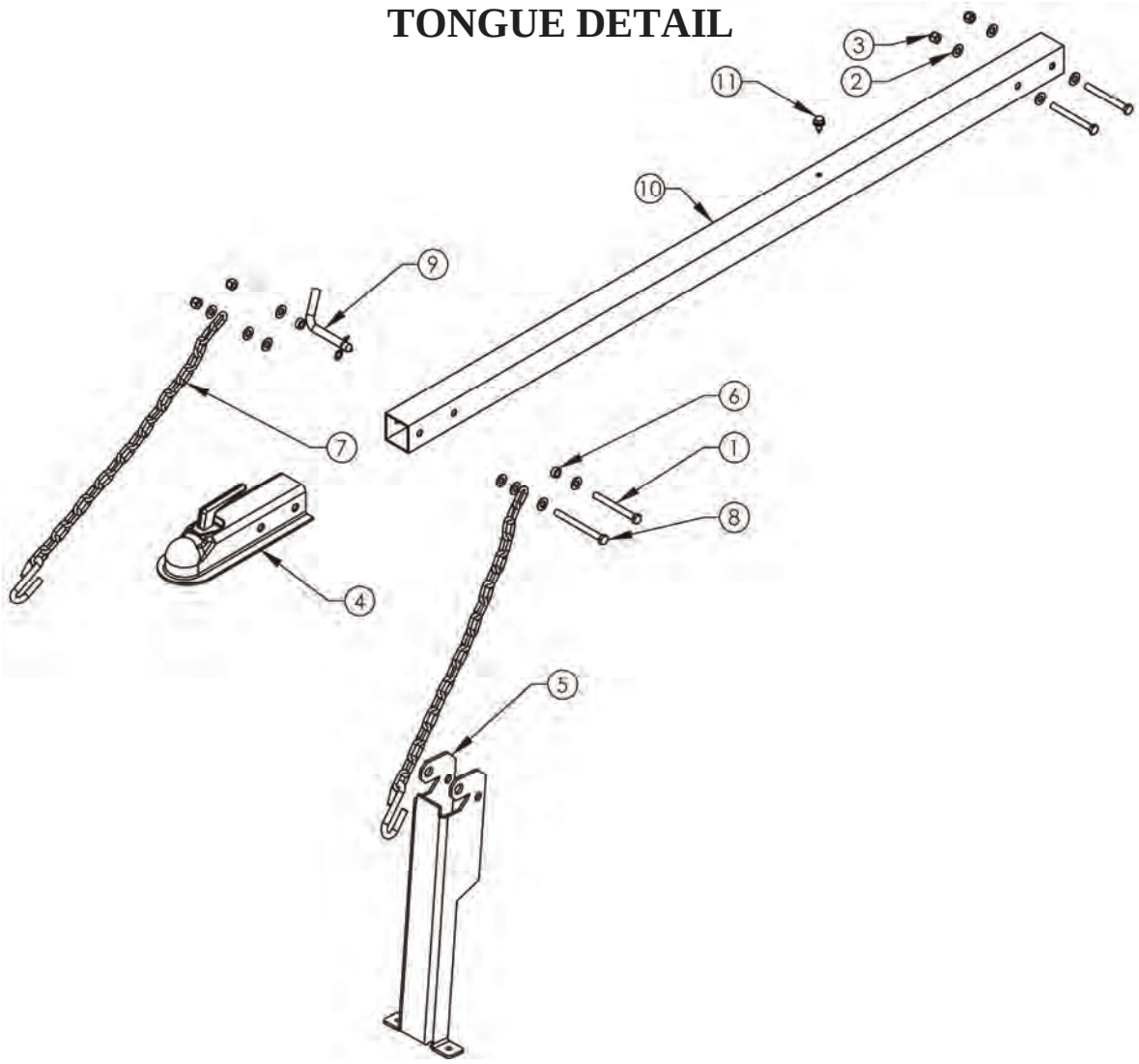

ITEM NO.	QTY.	PART NO.	DESCRIPTION
1	3	NB649	BOLT - HEX, 3/8-16 X 3 1/2 GR5 ZP
2	12	NB272	3/8 SAE WASHER
3	4	NB182	3/8-16 NYLOC NUT
4	1	7365	2" Ball Coupler
5	1	14924TK	Stand - Folding
6	2	7840Z	Latch Pin Guide Bushing
7	2	7366	Safety Chain W/S Hook
8	1	NB645	BOLT - 3/8-16 X 4 HCC GRD5 ZY
9	1	NB606	1/2" x 3" Bent Pin w/Hair Clip
10	1	16636TK	Log Splitter Tongue
11	1	26X249	SCREW - .312-18 x .75

PARTS BREAKDOWN

ENGINE DETAIL

LS87522HPF

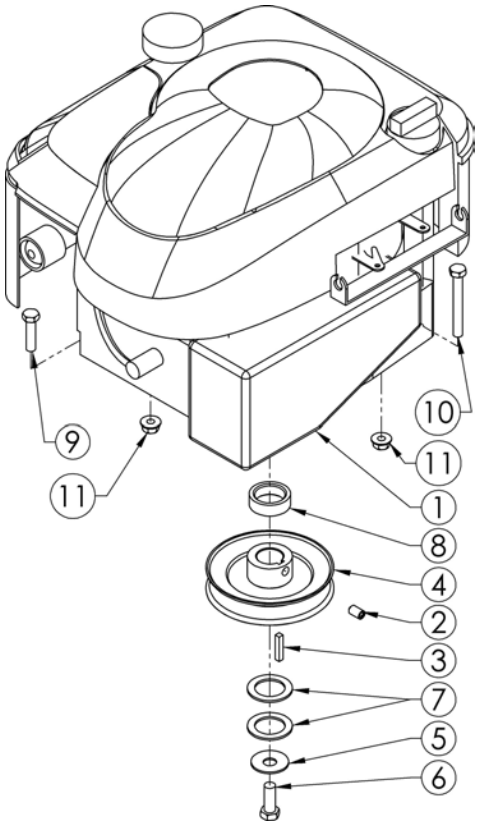

ITEM #	QTY.	PART #	DESCRIPTION
1	1	N/A	ENGINE
2	1	NB312	SCREW - SET, 5/16-18 X 1/2 W/ LOCTITE
3	1	9030	KEY STOCK - 3/16 X 1 UNDER SIZE PLN FNSH
4	1	7323	PULLEY - ENGINE
5	1	699	WASHER - BELLVILLE
6	1	NB238N	BOLT - HHC 3/8-24 X 1 GR 5 LOCTITE
7	2	10914	WASHER - 1 ID X 1 1/2 OD X14 GA; ZY
8	1	BB105SL	SPACER - LOWER FOR ENGINE PULLEY
9	2	NB504	BOLT - 5/16-18 X 1 1/4 HCC GR5 ZY
10	1	NB138	BOLT - 5/16-18 X 2 1/2 HCC GR5 ZY
11	3	NB170	NUT - SERR FLANGE 5/16-18 ZY CASE HRD

ENGINE DETAIL
LS11528HPF

ITEM NO.	QTY.	PART NO.	DESCRIPTION
1	1	N/A	ENGINE
2	1	NB238N	BOLT - HHC 3/8-24 X 1 GR5 LOCKTITE
3	1	NB312	5/16-18 X 1/2 SSC With Loctite H
4	4	NB170	NUT - 5/16-18 SERR FLANGE
5	4	NB505	313-18 X 1.50 BOLT
6	1	9030	3/16 X 1 KEY STOCK
7	1	699	WASHER - BELLEVILLE 7/16 X 1 1/4
8	1	BB105	ENGINE PULLEY 4.25 OD 1-1/4 ID
9	1	BB105SL	TUBE, SPACER 1.010 ID X .440 LONG
10	1	689L	TUBE, SPACER 1.06 ID X 1.500 LONG
11	2	10914	1" x 1 1/2" x 14 GA

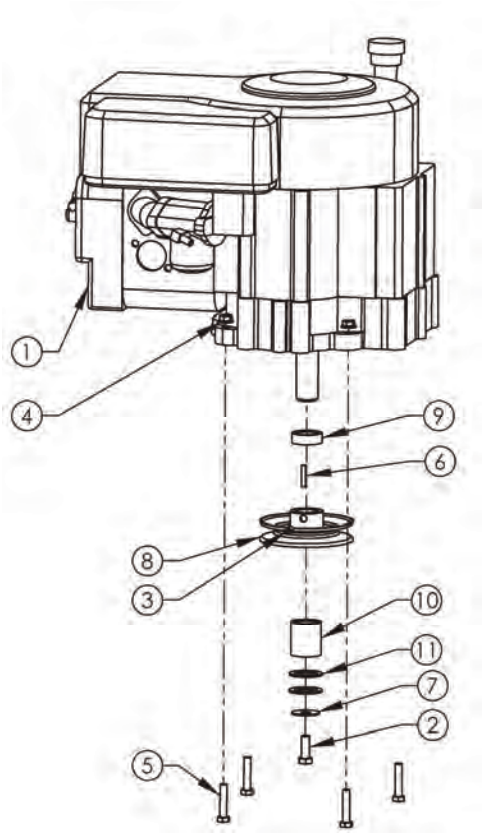

BELT ROUTING DIAGRAM

(VIEWED FROM UNDERSIDE OF SPLITTER)

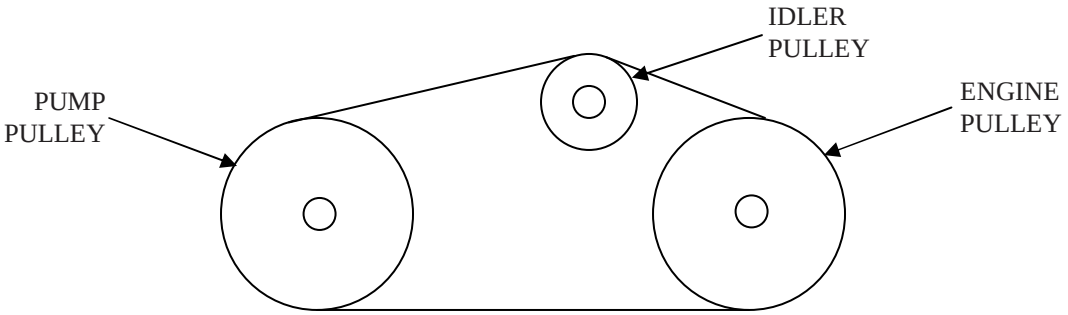

TROUBLESHOOTING

Problem	Cause	Remedy
Engine fails to start.	1. Spark plug wire disconnected.	1. Connect wire to spark plug.
	2. Fuel tank not full enough or stale fuel.	2. Fill tank full with clean, fresh gasoline.
	3. Throttle control lever not in correct starting position.	3. Move throttle lever to FAST position.
	4. Choke not in CHOKE position.	4. Move choke to CHOKE position.
	5. Engine not primed properly.	5. Prime engine.
	6. Fuel valve not ON or blocked fuel line.	6. Turn on fuel valve or clean fuel line.
	7. Faulty spark plug.	7. Clean, adjust gap, or replace spark plug.
Engine is hard to start or runs erratic.	1. Spark plug wire loose.	1. Connect and tighten spark plug wire.
	2. Unit running on CHOKE.	2. Move choke lever to OFF position.
	3. Blocked fuel line or stale fuel.	3. Clean fuel line; fill tank with clean, fresh gasoline
	4. Water or dirt in fuel system.	4. Drain fuel tank. Refill with fresh gasoline.
	5. Dirty air cleaner.	5. Clean or replace air cleaner.
	6. Carburetor out of adjustment.	6. See authorized service center.
Cylinder rod will not extend or contract.	1. Cold weather clutch not engaged.	1. Engage cold weather clutch.
	2. Broken or improperly installed belt.	2. Replace or reinstall belt.
	3. Low hydraulic fluid.	3. Fill hydraulic tank to correct fluid level.
	4. Hydraulic lines blocked.	4. Flush and clean hydrualic system.*
	5. Damaged or broken pump.	5. See authorized service center.
	6. Damaged control valve.	6. See authorized service center.
Cylinder rod is slow or erratic while extending and contracting.	1. Low hydraulic fluid.	1. Fill hydraulic tank to correct fluid level.
	2. Contaminated hydraulic fluid.	2. Drain fluid, flush system, and refill.
	3. Excessive pump inlet vacuum.	3. Make certain pump hoses are clear and unblocked. Make certain hose in not collapsing under suction.
	4. Damaged pump.	4. See authorized service center.
	5. Damaged control valve.	5. See authorized service center.
	6. Internal cylinder damage.	6. See authorized service center.
Leaking Cylinder	1. Broken seals.	1. See authorized service center.
	2. Scored cylinder.	2. See authorized service center.

MAINTENANCE LOG

NOTE: For repairs beyond those listed here, contact your nearest authorized service center.
* Flushing the reservoir tank and hoses with kerosene whenever service is performed on the tank, hydraulic pump or valve is recommended. Contact an authorized service center.

Date of Service	Service Performed		Notes

SPECIFICATIONS

LS87522HPF		
Splitting Force		22 Tons
Engine		8.75 Torque B&S
Splitting Positions		Horizontal and Vertical
Cylinder Size		ø4" X 24"
Pump		2 Stage
Pump Specs		11 Gallons Per Minute
Valve		Auto Return
Drive System		Belt Drive 1:1 ratio with Clutch for Easy Starting
Hydrualic System Fluid Capacity		11-13 Quarts
Maximum Log length		25 1/2"
Tire Specs		4.00 X 4.80 X 8 with High Speed Bearings
Metal Fenders		No

LS11528HPF		
Splitting Force		28
Engine		11.5 HP B&S
Splitting Positions		Horizontal and Vertical
Cylinder Size		ø4.5" X 24"
Pump		2 Stage
Pump Specs		16 Gallons Per Minute
Valve		Auto Return
Drive System		Belt Drive 1:1 ratio with Clutch for Easy Starting
Hydrualic System Fluid Capacity		19-21 Quarts
Maximum Log length		25 1/2"
Tire Specs		4.00 X 4.80 X8 with High Speed Bearings
Metal Fenders		No

SWISHER HISTORY

Back before electricity came to rural Missouri Max Swisher was producing lawn mowers from his mother's chicken house. Max never liked to mow grass. He installed a gearbox on his family's lawn mower creating a self-propelled unit. By tying one end of a rope to the mower and the other end to a tree in the center of the yard the mower circled the tree, shortening the rope and guiding the mower in concentric circles. Max enjoyed relaxing under a shade tree while his invention did all the work.

Max had designed his first self-propelled rotary lawn mower to do his dirty work for him. Neighbors noticed his new invention and began asking him to make more. Today, 60 years later, Swisher is still producing innovative lawn and garden and ATV/UTV equipment designed to give us all more "relaxing in the shade" time.

Swisher products have been featured nationally on television programs such as Regis and Kathie Lee and seen in publications like ATV Magazine, Country Journal, Popular Mechanics Magazine and others. In January 2000 Popular Mechanics Magazine named Max's zero turning radius riding mower one of the 20th century's top household inventions.

Swisher offers value and function in its products to meet your grounds maintenance needs.

CELEBRATING OVER 65 YEARS OF INNOVATION

SINCE 1945

SWISHER™
MADE IN THE U.S.A.
OD39

OWNER'S MANUAL

MODEL NO.
LS11528HPF
LS87522HPF

LOG SPLITTER

HOW TO ORDER REPAIR PARTS:

Each Log Splitter has its own serial number. Each engine has its own serial number. The serial number for the Log Splitter will be found on top of the motor base and to the rear of the engine. The serial number for the engine will be found on the top of the blower fan housing.
All Log Splitter parts listed herein may be ordered directly from Swisher, your nearest Swisher dealer, or from our website.
All engine parts may be ordered from the nearest dealer of the engine supplied with your log splitter. Parts subject to change without notice.

WHEN ORDERING PARTS, PLEASE HAVE THE FOLLOWING INFORMATION AVAILABLE:

* PRODUCT – SWISHER LOG SPLITTER
* SERIAL NUMBER - _____
* MODEL NUMBER - _____
* ENGINE MODEL NUMBER - _____
  TYPE - _____
* PART NUMBER
* PART DESCRIPTION

www.swisherinc.com
TELEPHONE - 1-800-222-8183
FAX - 1-660-747-8650

SWISHER
1602 CORPORATE DRIVE
WARRENSBURG, MO 64093

SWISHER