Add-A-Hitch

Installation Instructions and Parts list

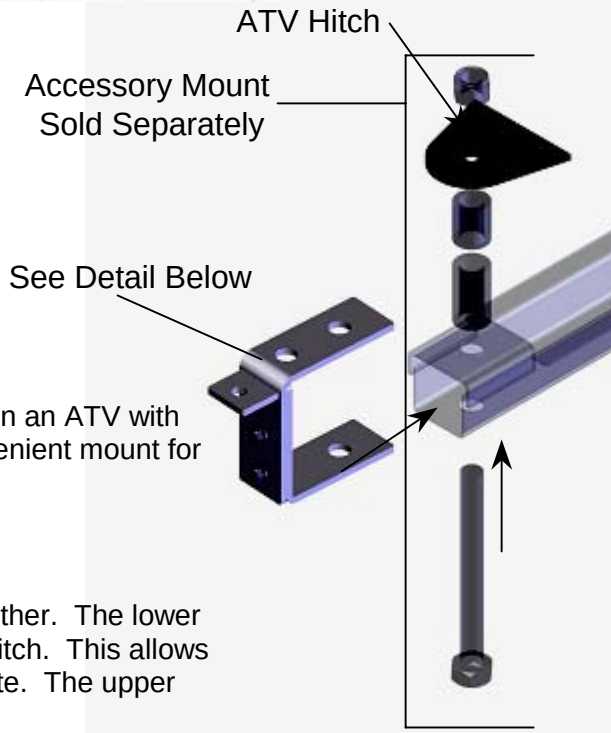

Add-A- Hitch Kit # 2145

The "Add-A-Hitch" was developed to provide a hitch ball mount on an ATV with the Swisher Accessory Mount installed. This kit also has a convenient mount for a clevis type tow Pin.

To Install

1. Remove parts from box and identify. (See Illustration)
2. Select proper spacing of the Hitch halves and secure together. The lower Bracket slides into the Channel Mount of the Accessory Hitch. This allows the hitch assembly to float within the channel, but not rotate. The upper set on top of the ATV Hitch.
3. Install Hitch Ball (Not Provided) into the rear hole of the Hitch Bracket With Tab.
4. Install on the ATV with the original bolt (a longer bolt is supplied if necessary). The bolt goes up through the bottom of the channel then through the lower leg of the hitch, top of channel, then spacers, ATV hitch mount, upper leg of the Hitch, then the Nut.
5. Secure all the hardware.

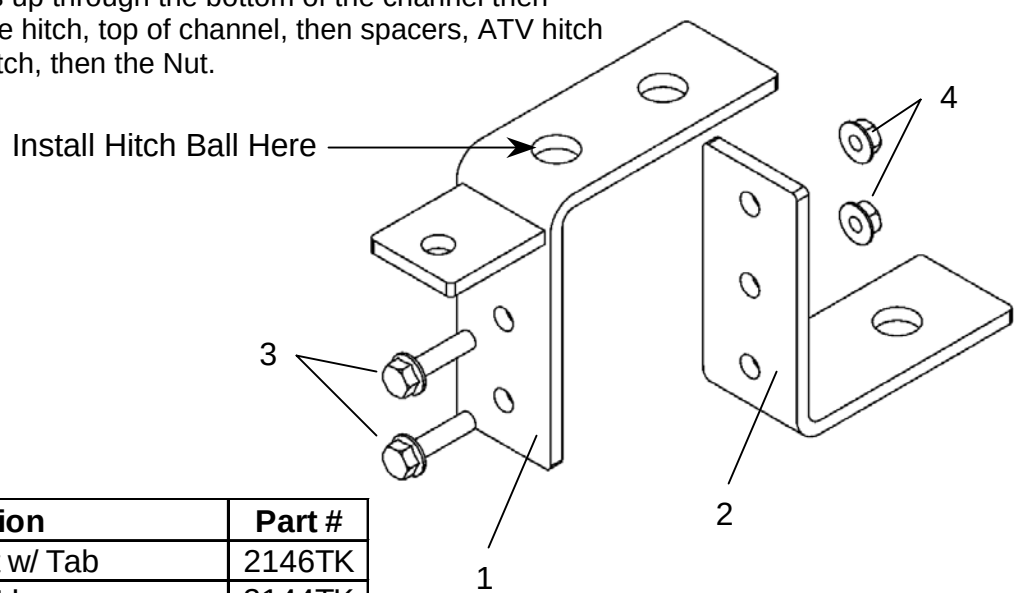

Item #	Description	Part #
1	Hitch Bracket w/ Tab	2146TK
2	Hitch Bracket Lower	2144TK
3	5/16-18 X 1 1/4 Serrated Flange Bolt	NB253
4	5/16-18 Serrated Flange Nut	NB170
5	3/4-10 X 8 HCS GR5 ZP (Not Shown)	NB706

1602 Corporate Dr. PO Box 67 Warrensburg, MO 64093
Phone: 660.747.8183 Fax: 660.747.8650