# SWISHER

**MANUFACTURING QUALITY LAWN CARE EQUIPMENT SINCE 1945**

# Owner's Manual

**Accessories Mount 2646**

**Extension Kit 2900**

**Mount Kit Traxter 7119**

**Mount Kit Outlander 7668**

**IMPORTANT**
**Read and follow all Safety Precautions and Instructions Before Operating this Equipment.**

# ATV ACCESSORIES

**Sold as Separate Pieces!!!!**

**ASSEMBLY**
**OPERATION**
**SERVICE AND ADJUSTMENT**
**REPAIR PARTS**

Made In The
**USA**
of US and Global Parts

1602 CORPORATE DRIVE WARRENSBURG, MISSOURI 64093
PH 660.747.8183 FAX 660.747.8650
swisherinc.com

# LIMITED WARRANTY

The manufacturer's warranty to the original consumer purchaser is: This product is free from defects in materials and workmanship for a period of one (1) year from the date of purchase by the original consumer purchaser. We will repair or replace, at our discretion, parts found to be defective due to materials or workmanship. This warranty is subject to the following limitations and exclusions:

| | | |
|---|---|---|
| 1) | Commercial Use | This product is not intended for commercial use and carries no commercial warranty. |
| 2) | Limitation | This warranty applies only to products which have been properly assembled, adjusted, and operated in accordance with the instructions contained within this manual. This warranty does not apply to any product of Swisher that has been subject to alteration, misuse, abuse, improper assembly or installation, shipping damage, or to normal wear of product. |
| 3) | Exclusions | Excluded from this warranty are normal wear, normal adjustments, and normal maintenance. |

In the event you have a claim under this warranty, you must return the product to an authorized service dealer. All transportation charges, damage, or loss incurred during transportation of parts submitted for replacement or repair under this warranty shall be borne by the purchaser. Should you have any questions concerning this warranty, please contact us toll-free at 1-800-222-8183. The model number, serial number, date of purchase, and the name of the authorized Swisher dealer from whom you purchased the product will be needed before any warranty claim can be processed.

**THIS WARRANTY DOES NOT APPLY TO ANY INCIDENTAL OR CONSEQUENTIAL DAMAGES AND ANY IMPLIED WARRANTIES ARE LIMITED TO THE SAME TIME PERIODS STATED HEREIN FOR ALL EXPRESSED WARRANTIES**. Some states do not allow the limitation of consequential damages or limitations on how long an implied warranty may last, so the above limitations or exclusions may not apply to you. This warranty gives you specific legal rights and you may have other rights, which vary from state-to-state. This is a limited warranty as defined by the Magnuson-Moss Act of 1975.

## SAFETY PRECAUTIONS & DECALS

**This Safety Alert Symbol indicates important messages in this manual. When you see this symbol, carefully read the message that follows and be alert to the possibility of personal injury.**

**Read this manual completely. Failure to observe the following safety instructions could result in serious injury or death.**

- Read the manual. Learn to operate this machine safely.
- Keep the operating speed LOW!!!!! Do not operate over 5 MPH (8KMH).
- Allow only responsible adults who are familiar with these instructions to operate this machine. Never allow children to operate this machine.
- Be sure the area is clear of other people before operating. Children are often attracted to the machine and the operating activity. **Never assume that children will remain where you last saw them.** Keep children under the watchful care of another responsible adult.
- Watch for traffic when operating near or crossing roadways.
- Do not operate the attachment if it has been dropped or damaged in any manner. Repair as necessary.
- Stop and inspect the equipment if you strike an object. Repair if necessary, before restarting.
- Dress properly. Do not operate when bare foot or wearing open sandals.
- Do not operate the machine while under the influence of alcohol or drugs.
- Never tamper with safety devices. Check their proper operation regularly.
- Operate attachments up and down slopes. There is a significant risk of overturns when operating across slopes.
- **Never make adjustments or repairs with the ATV engine running.**

**OD45 Warning Decal**

**OD55 Danger Decal**

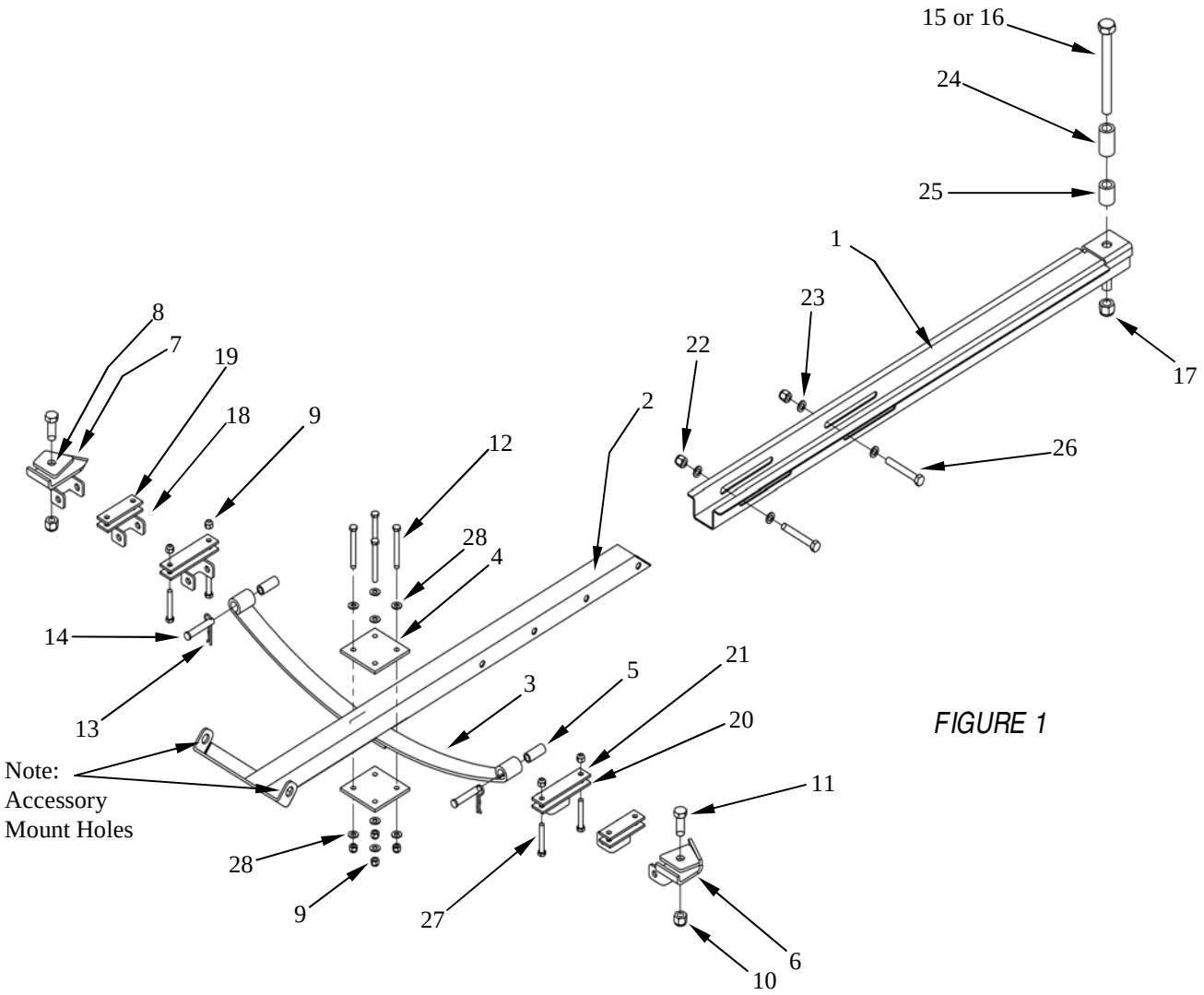


*FIGURE 1*

| ITEM NO. | QTY. | PART NO. | DESCRIPTION | | ITEM NO. | QTY | PART NO. | DESCRIPTION |
|---|---|---|---|---|---|---|---|---|
| 1 | 1 | 2630TK | Channel Mount | | 15 | 1 | NB-655 | 3/4 - 10 X 7 1/2 GR 5 Bolt |
| 2 | 1 | 2593TK | Slide Bar | | 16 | 1 | NB243 | 3/4 - 10 X 5 GR 5 Bolt |
| 3 | 2 | 2596TK | Leaf Spring | | 17 | 1 | NB-609 | 3/4 - 10 Nyloc Nut |
| 4 | 2 | 2631TK | Spring Shackle | | 18 | 2 | 2633TK | Mount Bracket Short |
| 5 | 2 | 2596-1 | Nylon Bushing | | 19 | 2 | 2635TK | Bracket Plate Short |
| 6 | 1 | 2638TK | ATV Bracket Left | | 20 | 2 | 2632TK | Mount Bracket Long |
| 7 | 1 | 2637TK | ATV Bracket Right | | 21 | 2 | 2634TK | Bracket Plate Long |
| 8 | 2 | 2641TK | Backing Bracket R&L | | 22 | 2 | NB-281 | 1/2 - 13 Nyloc Nut |
| 9 | 8 | NB-182 | 3/8 -16 Nyloc Nut | | 23 | 4 | NB-177 | 1/2 NR Mach Bushing |
| 10 | 2 | NB-561 | 5/8 - 11 Nyloc Nut | | 24 | 1 | 9609TK | Spacer 1.25 X .75 X 2.1875 |
| 11 | 2 | NB-699 | 5/8 - 11 X 3 GR 5 Hex Bolt | | 25 | 1 | 2655TK | Spacer 1.25 X .75 X 1.5 |
| 12 | 4 | NB-645 | 3/8 - 16 x 4 GR 5 Hex Head | | 26 | 2 | NB-577 | 1/2 - 13 X 3 1/2 GR5 Bolt |
| 13 | 2 | NB-247 | Hair Pin #10 | | 27 | 4 | NB-619 | 3/8 - 16 X 2 1/2 GR5 Bolt |
| 14 | 2 | NB-244 | 1/2 X 2 3/4 Clevis Pin | | 28 | 8 | NB-272 | 3/8 SAE Washer |

# INSTALLATION OF ACCESSORY MOUNT

***TO ENSURE PROPER INSTALLATION, CAREFULLY FOLLOW ALL INSTRUCTIONS LISTED BELOW***

## MOUNTING BRACKETS

Included with your new ATV accessories mount are three sets of mounting brackets for ATV's. Brackets 18,19 and 20,21 are two sets that will work on most ATV's. The determining factor is what type of A-arms (lower portion of the front axle) are used on your ATV. If your A-arm is narrow then use bracket set 18, 19. If your A-arm is wide then use bracket set 20,21. If you have a Polaris ATV use brackets 6, 7, and 8. **Note:** The Polaris brackets are right and left oriented. Make sure you set them up as shown in Fig. 1.

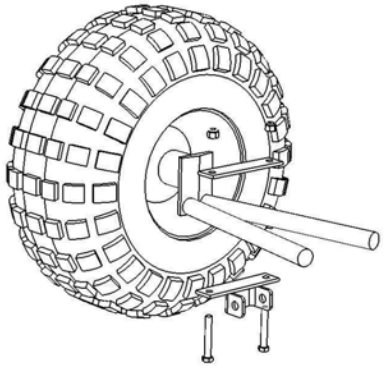

## REFER TO FIGURE 1 WHILE INSTALLING THE ACCESSORY MOUNT

**NOTE: The CV guards on your ATV maybe need to be trimmed or otherwise modified to allow for installation and proper clearance for the Accessory Mount.**

- If needed, for clearance, raise the front of the ATV. Make sure the support used is **very** stable.
- Lay out the hardware under the ATV, as shown.
- Mount the proper brackets to the lower A-arms of your ATV as near as possible to the outside end. Do not securely tighten at this time.

4. Mount leaf springs (3) to mounting brackets with clevis pin (14) and hair pin (13).
5. Attach channel mount (1) to the ATV ball hitch mount with 3/4 - 10 bolt (15 OR 16) and 3/4 - 10 nyloc nut (18). **Note:** the spacers (24 and 25) need to be installed to keep the accessories mount assembly level and for clearance.
6. Using two 1/2 - 13 bolts (26), four 1/2 bushings (23) and two 1/2 - 13 nyloc nuts (22) attach slide bar (2) to channel mount (1).
7. If previously raised, lower the ATV to the ground.
8. Place the two leaf springs (3), from step 4 and the assembly from step 6 between the spring shackles (4). Secure with four 3/8 – 16 bolts (12), eight washers (28) and four nyloc nuts (9).
9. Adjust the slide bar (2) so the accessory mounting holes are approximately two inches ahead of the front wheels. The accessory mounting holes should also be approximately 9' above the ground for proper operation of the optional bucket and blade attachments. Some adjustment may be needed, after attachment is installed, to assure acceptable clearance between the attachment and the ATV.
10. **Check clearance between the mounting brackets and the ATV wheel rims by turning the ATV steering to the extreme right and then the extreme left. Adjust location of the brackets if necessary. Securely tighten all fasteners starting with the four bolts listed in step 8.**
11. Removal of the mount assembly: Remove hair pins (13), pull clevis pins (14) and remove the channel mount (1) from the ATV ball hitch. Leave the mounting brackets attached to the A-Arms.
    For ease of removal of the clevis pins the ATV should be in the same aproximate raised or lowered postion as when the bolts listed in steps 8 and 10 were tightened.

# Honda Mounting Instructions

**Installation Instructions**

1. Place U-bracket over rear A-arm bar as shown.
2. Using supplied hardware, assemble plates and brackets. Position the brackets so they allow wheels to turn without contacting the rims (Reference step 10 on page 5) . Front bolt NB619 should be close to the front of the A-arm, contacting it if possible.

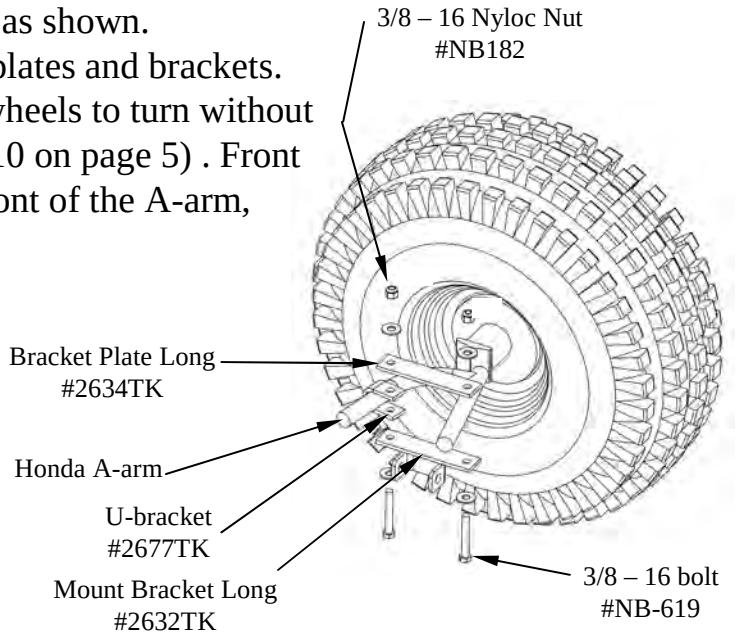


# Bombardier Traxter Mounting Instructions

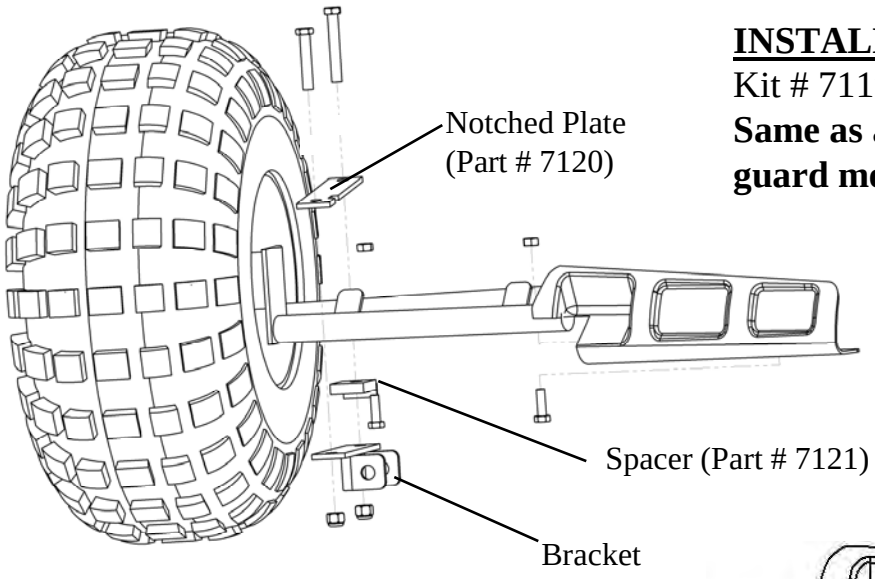


**INSTALLATION INSTRUCTIONS**

Kit # 7119 Required

**Same as above with addition of spacer and guard modification**

**A Arm Guard Modification**

Guard to be modified by Owner

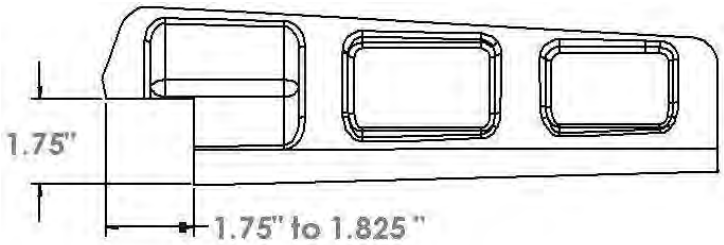

# Bombardier Outlander
# Accessory Mount Brackets Kit #7668

**HARDWARE AND PARTS**

2 - ACCESSORY MOUNT BRACKET 7669TK
2 - ACCESSORY MOUNT WELDMENT 7670TK
4 - 3/8-16 X 2 ½ BOLT NB619
8 - 3/8 SAE WASHER NB272
4 - 3/8 - 16 NYLOC NUT NB182
2 - 5/16 - 18 X 2 BOLT NB507
2 - 5/16 -18 NYLOC NUT NB181
4 - 5/16 SAE WASHER NB275

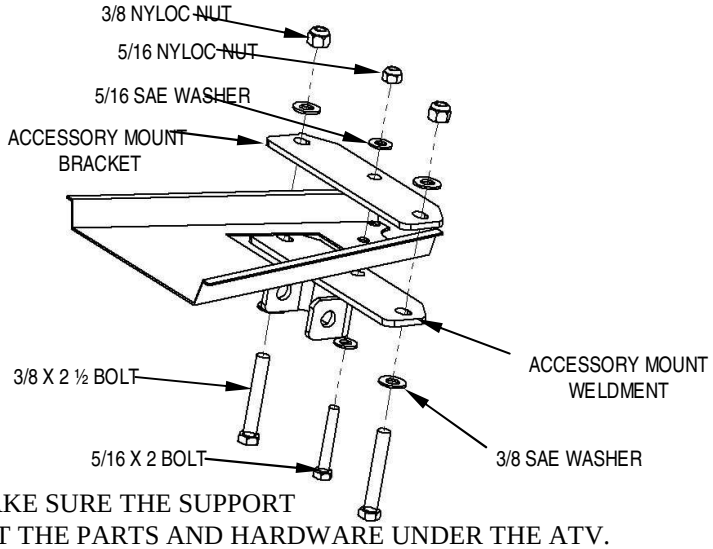


**MOUNTING INSTRUCTIONS**
(REFERENCE FIGURE ABOVE, LEFT SIDE SHOWN)
RAISE ATV SO THERE IS ENOUGH ROOM TO WORK. MAKE SURE THE SUPPORT USED TO HOLD UP THE ATV IS **VERY** STABLE. LAY OUT THE PARTS AND HARDWARE UNDER THE ATV.

MOUNT THE BRACKET AND WELDMENT AS SHOWN IN THE FIGURE. REPEAT THE SAME PROCESS FOR THE RIGHT SIDE.
- REMOVE THE EXISTING 5/16 CENTER BOLT FROM THE A-ARM / WHEEL ASSEMBLY. DO NOT REMOVE ANY OTHER BOLTS FROM THE ASSEMBLY.

COMPLETE THE INSTALLATION OF THE ACCESSORY MOUNT USING THE INSTRUCTIONS ON PAGE 5 OF THIS MANUAL.

# Bombardier TraxterMax Extension Kit
# Part # 2900 (Optional)

Note:
Extension of 21 – 33 inches at
Six inch increments.

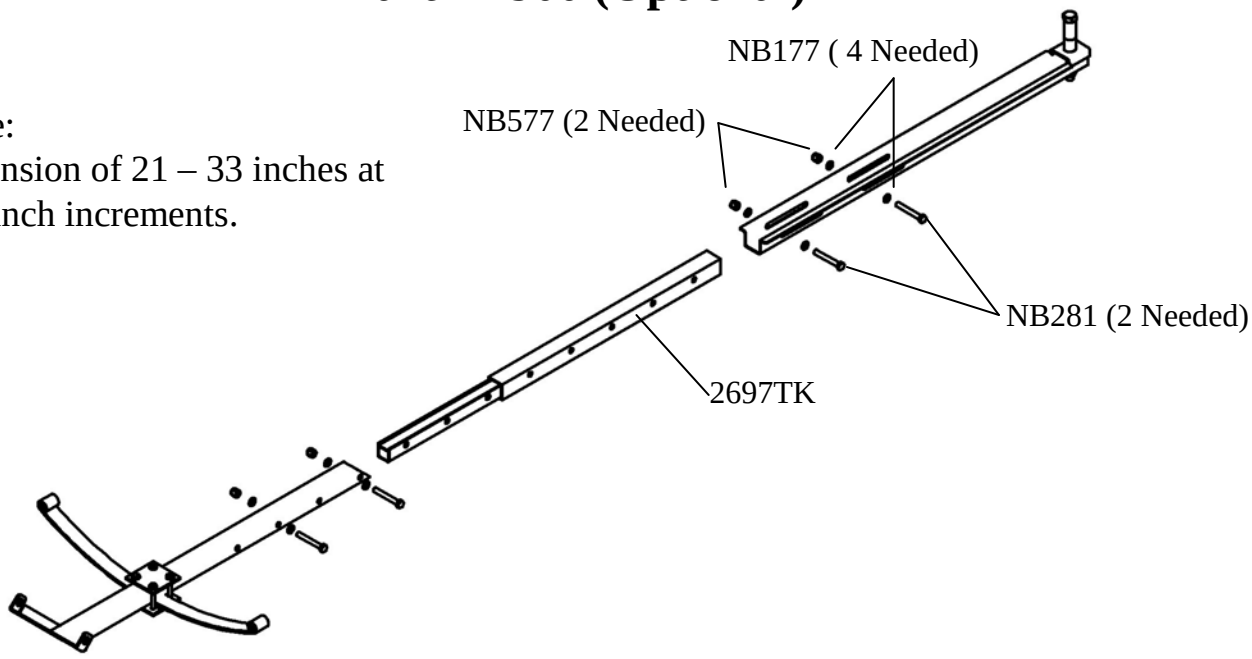

MANUFACTURING QUALITY LAWN CARE EQUIPMENT SINCE 1945

# Owner's Manual

**Accessories Mount**
**2646**

**Extension Kit**
**2900**

**Mount Kit Traxter**
**7119**

**Mount Kit Outlander**
**7668**

**IMPORTANT**
**Read and follow all Safety Precautions and Instructions Before Operating this Equipment.**

# ATV ACCESSORIES

**WHEN ORDERING PARTS, PLEASE HAVE THE FOLLOWING INORMATION AVAILABLE:**

* PRODUCT – _____
* SERIAL NUMBER - _____
* MODEL NUMBER - _____
TYPE - _____
* PART NUMBER WITH PAINT CODE
* PART DESCRIPTION


**TELEPHONE - 1-800-222-8183**
**FAX - 1-660-747-8650**

**SWISHER**
**1602 CORPORATE DRIVE**
**WARRENSBURG, MO 64093**

swisherinc.com