MANUFACTURING QUALITY LAWN CARE EQUIPMENT SINCE 1945

Owner's Manual

Skid Lift 2644

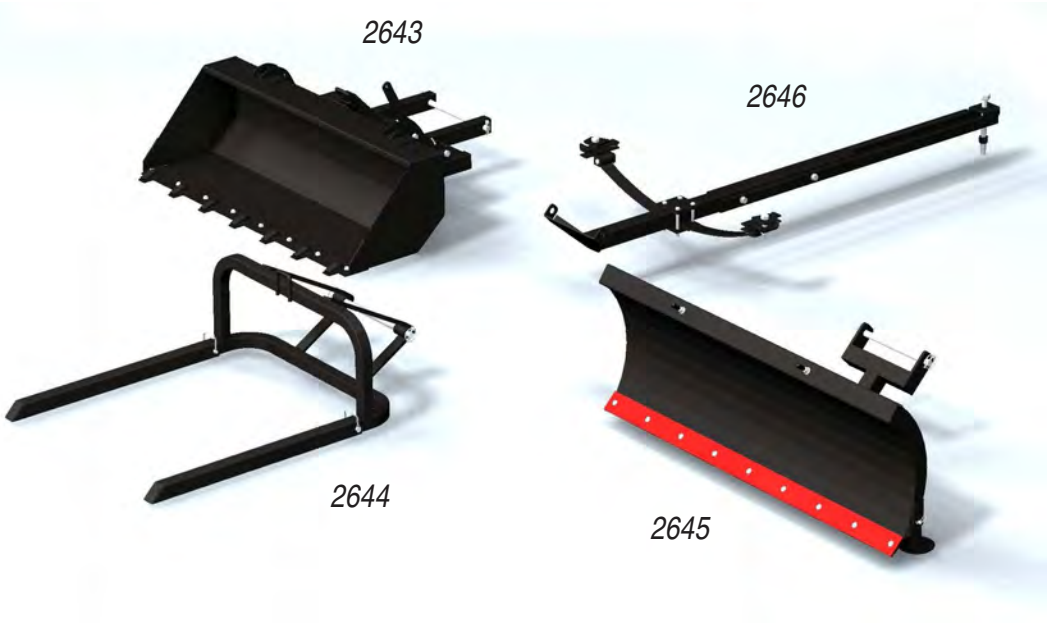

IMPORTANT
Read and follow all Safety Precautions and Instructions Before Operating this Equipment.

ATV ACCESSORIES

Sold as Separate Pieces!!!!

ASSEMBLY
OPERATION
SERVICE AND ADJUSTMENT
REPAIR PARTS

Made In The
USA

1602 CORPORATE DRIVE PO BOX 67 WARRENSBURG, MISSOURI 64093
PH 660.747.8183 FAX 660.747.8650
swisherinc.com

2801 REV. 05-010

LIMITED WARRANTY

The manufacturer's warranty to the original consumer purchaser is: This product is free from defects in materials and workmanship for a period of one (1) year from the date of purchase by the original consumer purchaser. We will repair or replace, at our discretion, parts found to be defective due to materials or workmanship. This warranty is subject to the following limitations and exclusions:

1) Commercial Use	The warranty period for any product used for commercial or rental is limited to ninety (90) days from the date of original purchase.
2) Limitations	This warranty applies only to products which have been properly assembled, adjusted, and operated in accordance with the instructions contained within this manual. This warranty does not apply to any product of Swisher Mower Co., Inc., that has been subject to alteration, misuse, abuse, improper assembly or installation, or shipping damage.
3) Exclusions	Excluded from this warranty are normal wear, normal adjustments, and normal maintenance.

In the event you have a claim under this warranty, you must return the product to an authorized service dealer. All transportation charges, damage, or loss incurred during transportation of parts submitted for replacement or repair under this warranty shall be borne by the purchaser. Should you have any questions concerning this warranty, please contact us toll-free at 1-800-222-8183. The model number, serial number, date of purchase, and the name of the authorized Swisher dealer from whom you purchased the product will be needed before any warranty claim can be processed.

THIS WARRANTY DOES NOT APPLY TO ANY INCIDENTAL OR CONSEQUENTIAL DAMAGES AND ANY IMPLIED WARRANTIES ARE LIMITED TO THE SAME TIME PERIODS STATED HEREIN FOR ALL EXPRESSED WARRANTIES.
Some states do not allow the limitation of consequential damages or limitations on how long an implied warranty may last, so the above limitations or exclusions may not apply to you. This warranty gives you specific legal rights and you may have other rights, which vary from state-to-state. This is a limited warranty as defined by the Magnuson-Moss Act of 1975.

SAFETY PRECAUTIONS

This Safety Alert Symbol indicates important messages in this manual. When you see this symbol, carefully read the message that follows and be alert to the possibility of personal injury.

Read this manual completely. Failure to observe the following safety instructions could result in serious injury or death.

- Read the manual. Learn to operate this machine safely.
- Keep the operating speed LOW!!!!!
- Allow only responsible adults who are familiar with these instructions to operate this machine. Never allow children to operate this machine.
- Be sure the area is clear of other people before operating. Children are often attracted to the machine and the operating activity. ***Never assume that children will remain where you last saw them.*** Keep children under the watchful care of another responsible adult.
- Watch for traffic when operating near or crossing roadways.
- Do not operate the attachment if it has been dropped or damaged in any manner. Repair as necessary.
- Dress properly. Do not operate when barefoot or wearing open sandals.
- Do not operate the machine while under the influence of alcohol or drugs.
- Never tamper with safety devices. Check their proper operation regularly.
- Do not operate over 5 MPH (8KMH)
- Operate attachments up and down slopes. There is significant risk of overturns when operating across slopes.
- Stop and inspect the equipment if you strike an object. Repair, if necessary, before restarting.
- Never make adjustments or repairs with the engine running.

INSTALLATION OF SKID LIFT ATTACHMENT

TO ENSURE PROPER INSTALLATION, CAREFULLY FOLLOW ALL INSTRUCTIONS LISTED BELOW

REFER TO FIGURE 3 ON NEXT PAGE WHILE INSTALLING THE SKID LIFTER

1. BEGIN BY LAYING OUT THE PARTS SIMILAR TO THE FIGURE ON THE NEXT PAGE.
2. PLACE THE FORK ARM WELDMENTS(4) ONTO THE FORK LIFT ADAPTER(1).
3. SECURE THE FORK ARMS(4) WITH THE SAFETY HITCH PINS(5).
4. PLACE THE FORK LIFT KIT IN FRONT OF THE ALREADY INSTALLED **SWISHER** ACCESSORY MOUNT.
5. INSERT THE MOUNT PIN(2) INTO THE FORK LIFT ADAPTER(1) AND THROUGH THE ACCESSORY MOUNT.
6. ATTACH YOUR WINCH TO THE EYELET AT THE TOP OF THE FORK LIFT ADAPTER(1).

SKID LIFT ATTACHMENT

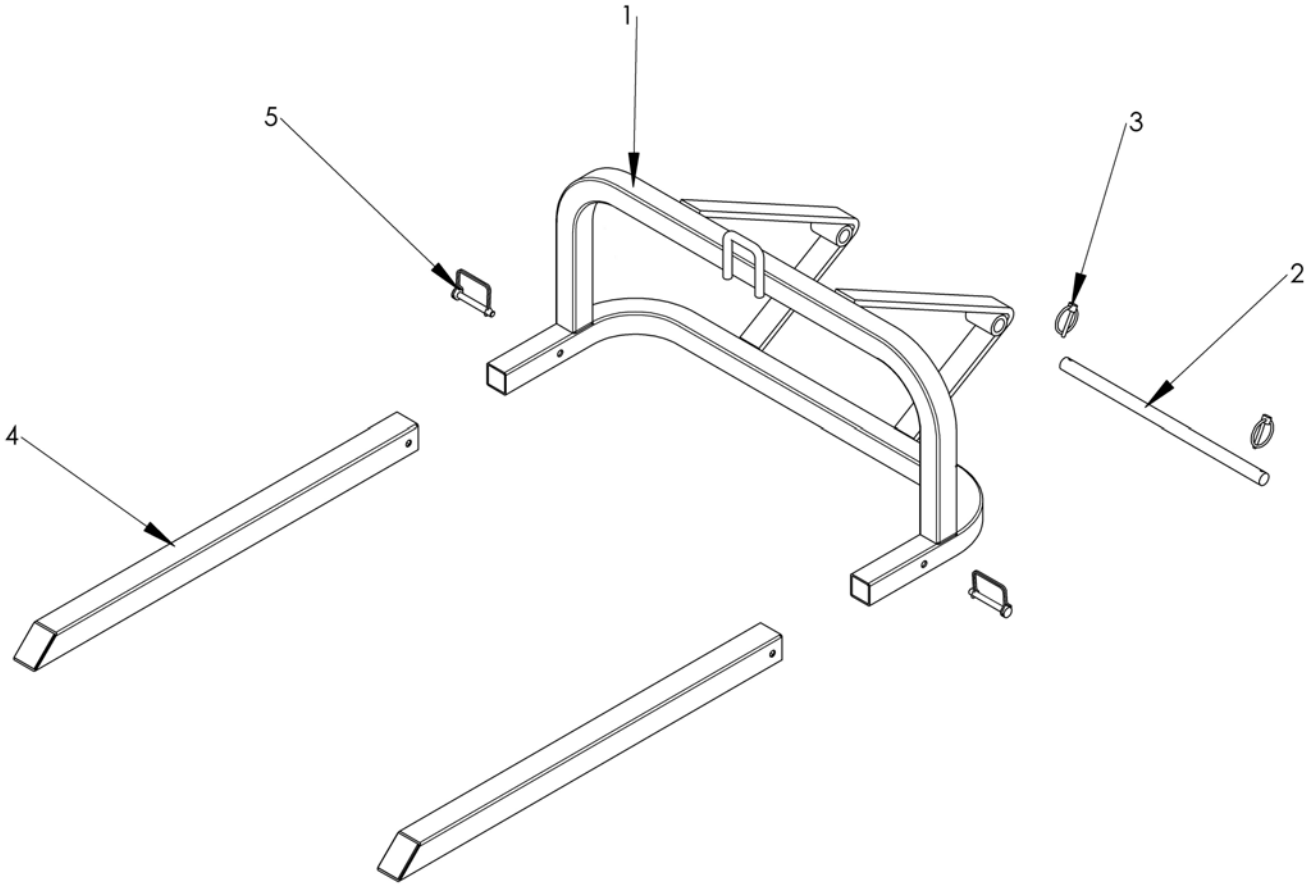

FIGURE 3

ITEM NO.	QTY.	PART NO.	DESCRIPTION
1	1	5525TK	FORK LIFT ADAPTER
2	1	2660TK	MOUNT PIN
3	2	NB506	3/16 CLICK PIN
4	2	5535TK	FORK ARM WELDMENT
5	2	H11	SAFETY HITCH PIN

ADJUSTMENT AND OPERATION

DON'T LEAVE SKID MARKS!!

USE YOUR WINCH TO RAISE AND LOWER THE SKID LIFTER. DO NOT LET THE SKID LIFTER DRAG WHILE OPERATING. WHEN MOVING PALLETS, OPERATE THE SKID LIFTER AT SLOW SPEEDS TO AVOID ACCIDENTS. WATCH OUT FOR ANGLED SURFACES ON WHICH THE SKID LIFTER COULD GET STUCK OR STICK INTO!!

Notes:

MANUFACTURING QUALITY LAWN CARE EQUIPMENT SINCE 1945

Owner's Manual

Skid Lift 2644

IMPORTANT
Read and follow all Safety Precautions and Instructions Before Operating this Equipment.

ATV ACCESSORIES

WHEN ORDERING PARTS, PLEASE HAVE THE FOLLOWING INORMATION AVAILABLE:

* PRODUCT – _____
* SERIAL NUMBER - _____
* MODEL NUMBER - _____
TYPE - _____
* PART NUMBER WITH PAINT CODE
* PART DESCRIPTION

TELEPHONE - 1-800-222-8183
FAX - 1-660-747-8650

SWISHER MOWER & MACHINE CO. INC.
1602 CORPORATE DRIVE
P.O. BOX 67
WARRENSBURG, MO 64093

swisherinc.com