swisherinc.com

OWNER'S MANUAL

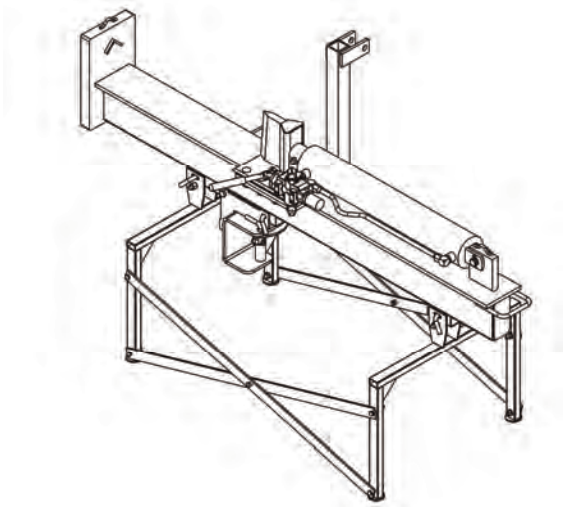

MODEL NO. LS3P

Starting Serial#: L106348001

3 POINT LOG SPLITTER

IMPORTANT

Read and follow all Safety Precautions and Instructions before operating this equipment.

Safety
Assembly
Operation
Service and Adjustment
Repair Parts

1602 CORPORATE DRIVE, WARRENSBURG, MISSOURI 64093 PHONE 660-747-8183
FAX 660-747-8650

Manufacturing quality lawn care equipment since 1945

Made In The USA

7645 REV 06-348

SAFETY DECALS

Replace decals immediately if damaged.

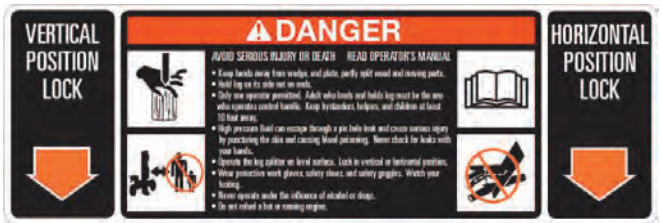

OD09 – DANGER/POSITION LOCK DECAL

ITEM #	QTY	PART #	DESCRIPTION
1	1	7648TC	Beam Weldment - 3 Point Splitter
2	1	Wedge Assy	See Detail
3	1	7284TK	Cylinder - 4 X 24 X 1.75
4	1	NB131	Bolt - 1/2-13 X 3 HCC GR5 ZY
5	1	NB121	Nut - Jam Lock, 1/2-13 2-Way Gr A
6	1	7293	Pin - Cylinder to Beam Zp
7	2	NB642	Cotter - Hairpin #23-09 .093X 1- 13/16
8	1	7292	Pipe - Nipple 24SA-08 YZ
9	2	7291	Elbow - Hydraulic 1/2 x 1/2 Thread YZ
10	1	7287TK	Valve - Control
11	1	7288TK	Line - Assy Stationary
12	2	7387	Fitting - Valve Inlet 849FS10-12 YZ

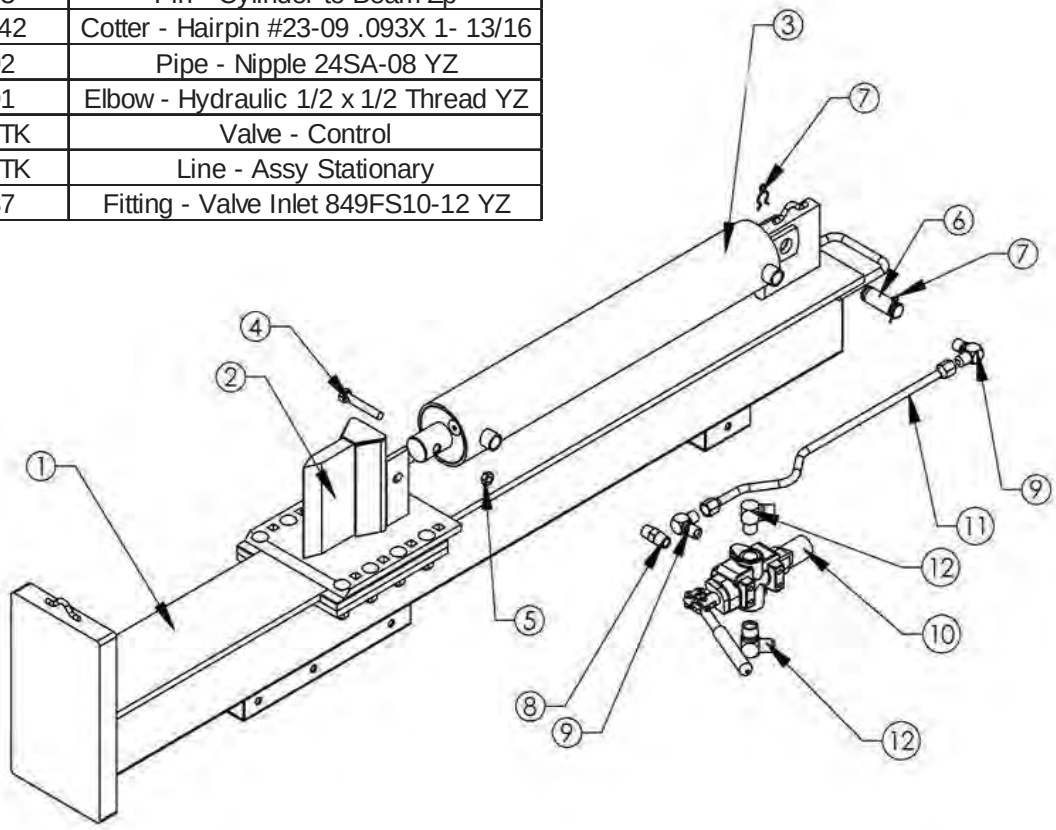

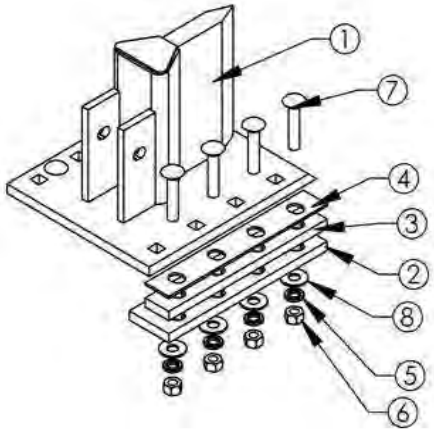

Beam Detail

ITEM #	QTY	PART #	DESCRIPTION
1	1	7233TK	Wedge - Weldment
2	2	7333TK	Plate - Bottom Head Slide
3	2	7237TK	Spacer - 4 Slot, .500 Thick
4	2	7388TK	Spacer - 4 Slot, 11 GA
5	8	NB508	Washer - Lock ,1/2 ZY Medium Duty
6	8	NB213Z	Nut - 1/2-13 GR2 ZY
7	8	NB643	Bolt - Carriage 1/2-13 X 2 1/2
8	8	NB555	Washer - USS Flat, 1/2 ZY

ITEM #	QTY	PART #	DESCRIPTION
2	1	7650TK	Mount - Rotating
5	1	7660TK	Mount - 3 PT
6	1	NB655	Bolt - 3/4-10 X 7 1/2 GR5
7	1	NB313	Nut - Nylock Jam 3/4-10
8	1	NB502	Pin - Bent 1/2 X 2 1/2

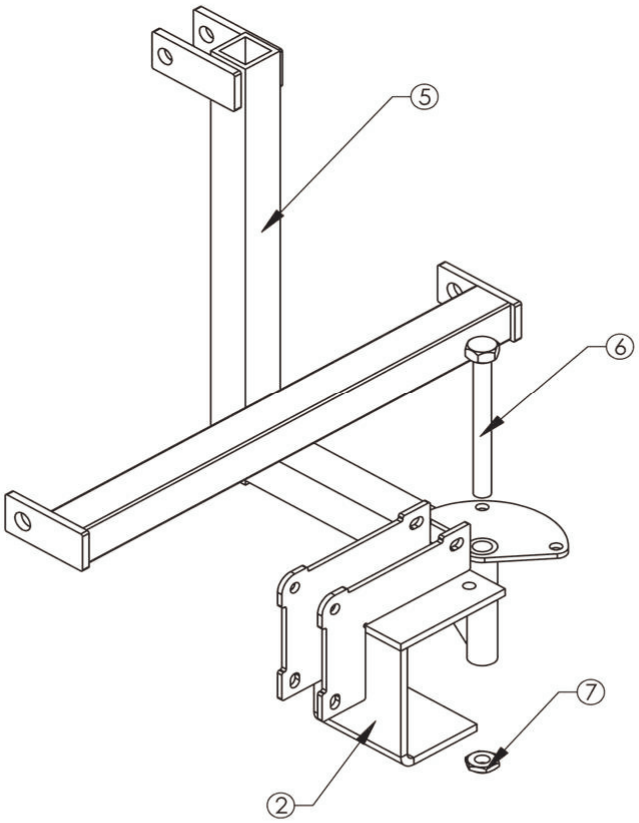

Position the Rotating Mount over the 3 Point Mount and insert bolt. Thread the nut onto the bolt until assembly is snug. Check to make sure that the assembly rotates freely.

3 Point Mount Assembly

ITEM NO.	QTY.	PART NO.	DESCRIPTION
1	1	Beam Assy	Beam Assembly - 3 Point Splitter
2	1	7650TK	Rotating Mount
3	1	NB577	Bolt - 1/2-13 X 3 1/2 GR5 ZY
4	1	NB281	Nut - Nyloc 1/2-13 ZY
5	1	7660TK	3 Point Mount
8	1	NB502	Pin - Bent 1/2 X 2 1/2
9	1	NB506	Pin - Click, 3/16
10	1	NB648	Pin - Hitch W/Hair Pin, 1/2 X 3 1/2
11	1	NB648	Hair Pin

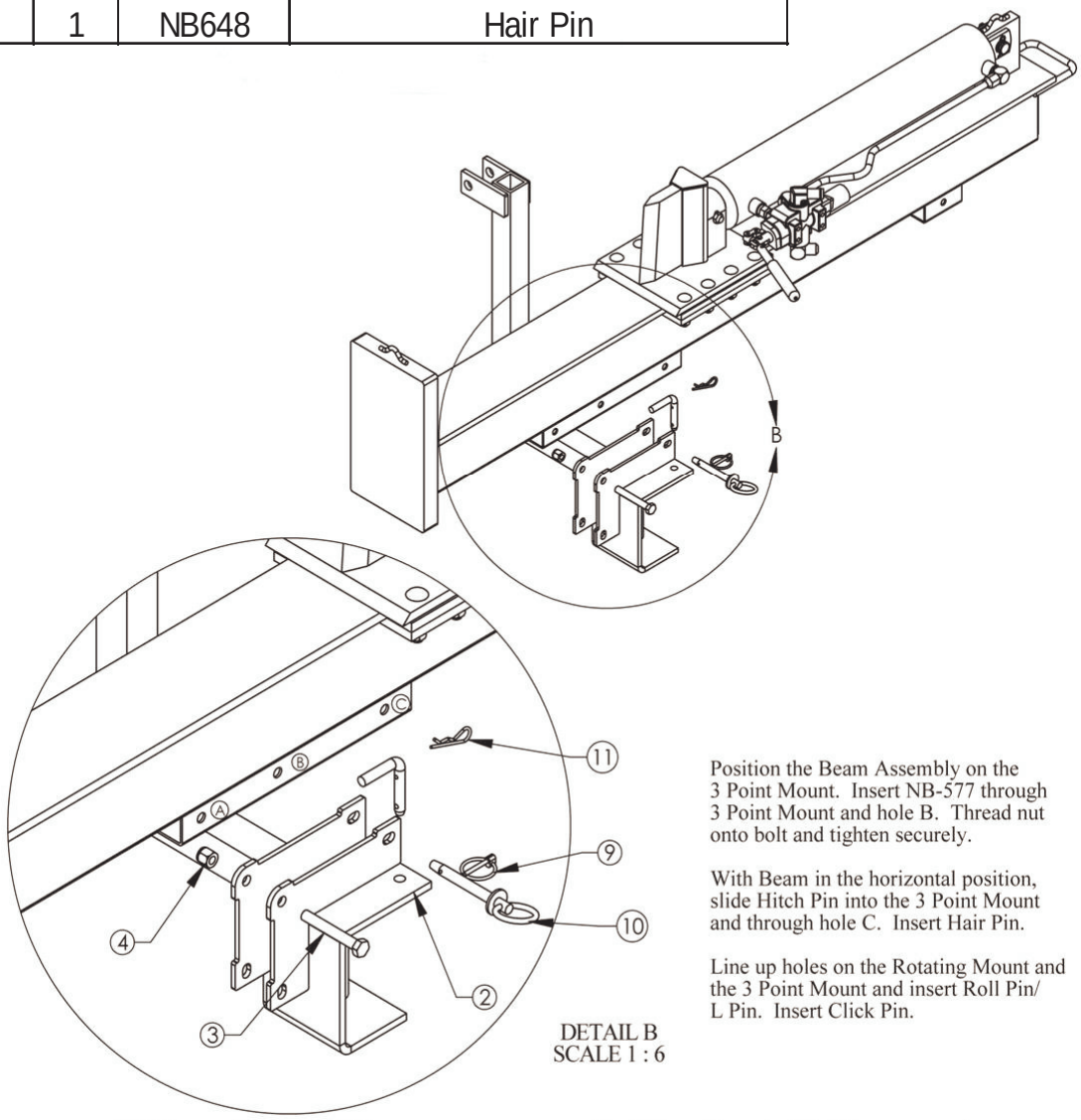

Position the Beam Assembly on the 3 Point Mount. Insert NB-577 through 3 Point Mount and hole B. Thread nut onto bolt and tighten securely.

With Beam in the horizontal position, slide Hitch Pin into the 3 Point Mount and through hole C. Insert Hair Pin.

Line up holes on the Rotating Mount and the 3 Point Mount and insert Roll Pin/ L Pin. Insert Click Pin.

Placing Beam on 3 Point Mount

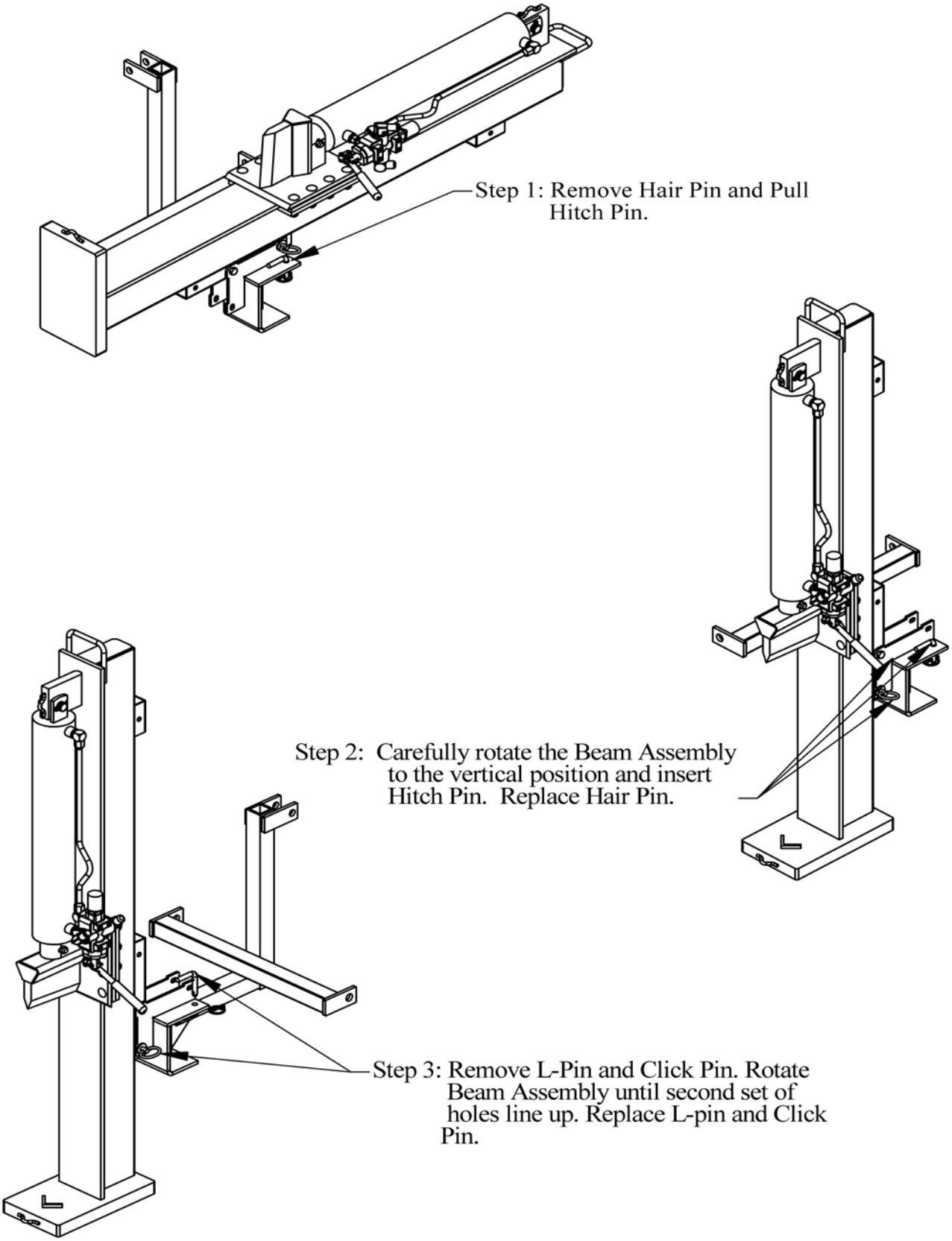

Operating Instructions for Vertical Splitting.

Item No.	Qty	Part No.	Description
1	1	Assembled Stand	3 Point Splitter Stand
2	1	3 Point Mounted on Beam Assy	3 Point Splitter
3	2	NB648	Pin - Hitch W/Hair Pin, 1/2 X 3 1/2
4	2	NB648 (Hair Pin)	Hair Pin
		10225	Kit - Valve Conv; Open - Closed Center

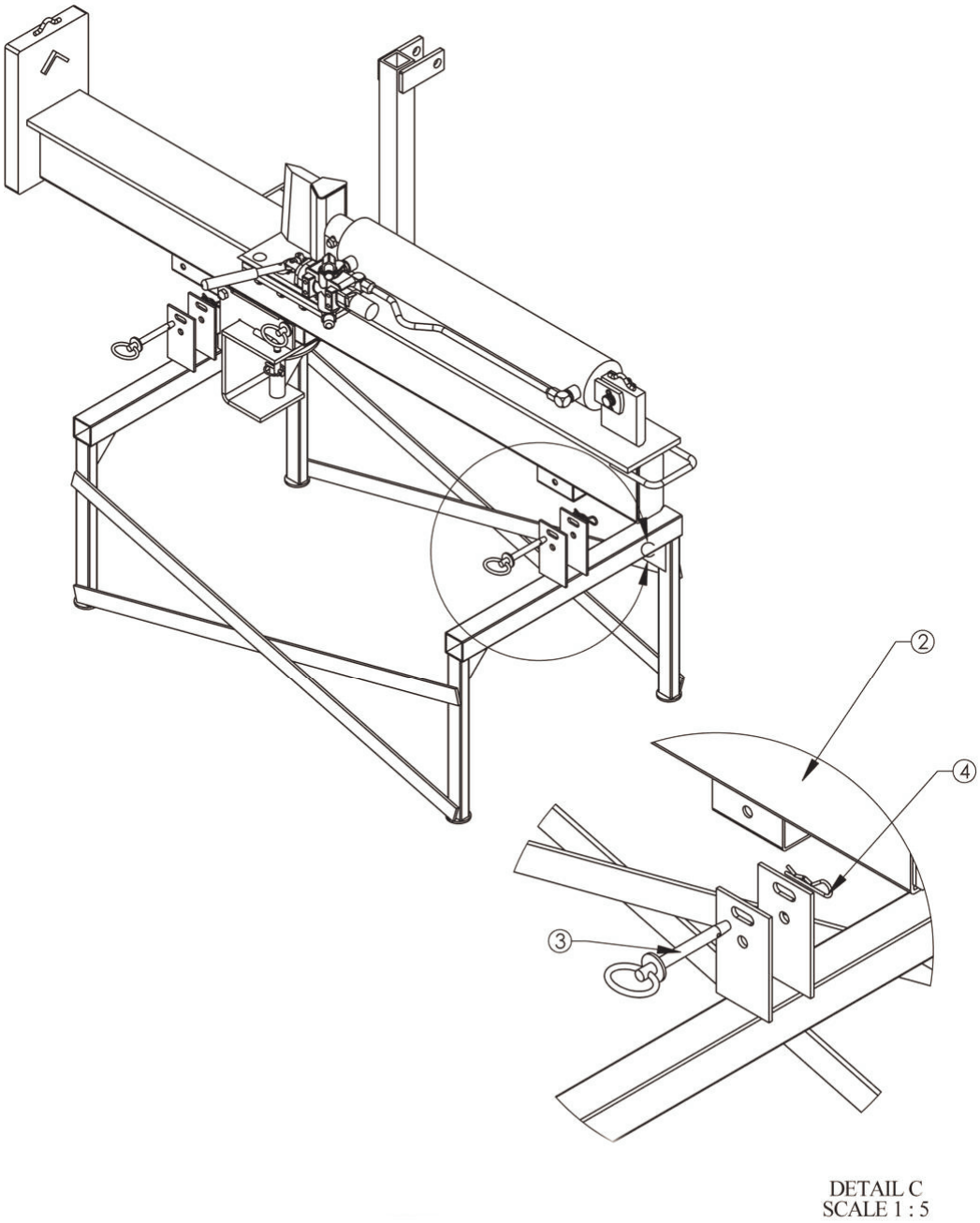

Placing Splitter on Stand.

OWNER'S MANUAL

MODEL NO. LS3P

LOG SPLITTER

HOW TO ORDER REPAIR PARTS:

Each Log Splitter has its own serial number. The serial number for the Log Splitter will be found on the beam. All Log Splitter parts listed herein may be ordered directly from Swisher Mower & Machine Co. Inc., your nearest Swisher dealer, or from our website.
Parts subject to change without notice.

WHEN ORDERING PARTS, PLEASE HAVE THE FOLLOWING INORMATION AVAILABLE:

* PRODUCT – SWISHER LOG SPLITTER
* SERIAL NUMBER - _____
* MODEL NUMBER - _____
* PART NUMBER
* PART DESCRIPTION

www.swisherinc.com
TELEPHONE - 1-800-222-8183
FAX - 1-660-747-8650

SWISHER MOWER & MACHINE CO. INC.
1602 CORPORATE DRIVE
WARRENSBURG, MO 64093

SWISHER MOWER & MACHINE CO. INC.