swisherinc.com

OWNER'S MANUAL

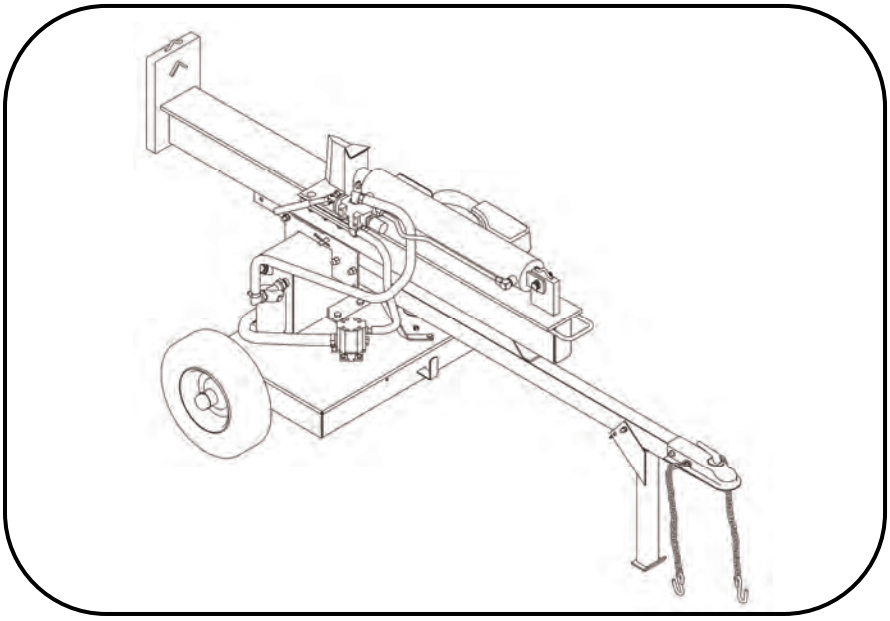

MODEL NO.
LS622
LS826
LS934
LS10534D

LOG SPLITTER

IMPORTANT

Read and follow all Safety Precautions and Instructions before operating this equipment.

Rev.07.04.2001

Safety
Assembly
Operation
Service and Adjustment
Repair Parts

1602 CORPORATE DRIVE, WARRENSBURG, MISSOURI 64093 PHONE 660-747-8183
FAX 660-747-8650

Manufacturing quality lawn care equipment since 1945

Made In The ***USA***

ONLS

LIMITED WARRANTY

The manufacturer's warranty to the original consumer purchaser is: This product is free from defects in materials and workmanship for a period of two (2) years from the date of purchase by the original consumer purchaser. We will repair or replace, at our discretion, parts found to be defective due to materials or workmanship. This warranty is subject to the following limitations and exclusions:

1) **Engine Warranty** All engines utilized on our products have a separate warranty extended to them by the individual engine manufacturer. Any engine service difficulty is the responsibility of the engine manufacturer and in no way is Swisher Mower Co., Inc. or its agents responsible for the engine warranty. The Briggs & Stratton Engine Service Hot-Line is 1-800-233-3723. The Tecumseh Engine Service Hot-Line is 1-800-558-5402.

2) **Commercial Use** The warranty period for any product used for commercial or rental is limited to ninety (90) days from the date of original purchase.

3) **Limitations** This warranty applies only to products which have been properly assembled, adjusted, and operated in accordance with the instructions contained within this manual. This warranty does not apply to any product of Swisher Mower Co., Inc., that has been subject to alteration, misuse, abuse, improper assembly or installation, shipping damage, or to normal wear of the product.

4) **Exclusions** Excluded from this warranty are normal wear, normal adjustments, and normal maintenance. The pump, valve and cylinder each carry separate manufacture's warranties. The valve and cylinder both carry a one (1) year limited warranty. The pump carries a two (2) year limited warranty.

In the event you have a claim under this warranty, you must return the product to an authorized service dealer. All transportation charges, damage, or loss incurred during transportation of parts submitted for replacement or repair under this warranty shall be borne by the purchaser. Should you have any questions concerning this warranty, please contact us toll-free at 1-800-222-8183. The model number, serial number, date of purchase, and the name of the authorized Swisher dealer from whom you purchased the mower will be needed before any warranty claim can be processed.

THIS WARRANTY DOES NOT APPLY TO ANY INCIDENTAL OR CONSEQUENTIAL DAMAGES AND ANY IMPLIED WARRANTIES ARE LIMITED TO THE SAME TIME PERIODS STATED HEREIN FOR ALL EXPRESSED WARRANTIES. Some states do not allow the limitation of consequential damages or limitations on how long an implied warranty may last, so the above limitations or exclusions may not apply to you. This warranty gives you specific legal rights and you may have other rights, which vary from state-to-state. This is a limited warranty as defined by the Magnuson-Moss Act of 1975.

Please fill out the serial numbers and model numbers for both the engine and the log splitter on the back page of this manual.

SAFETY PRECAUTIONS

This Safety Alert Symbol indicates important messages in this manual. When you see this symbol, carefully read the message that follows and be alert to the possibility of personal injury.

Read this manual completely. This machine can amputate hands, feet, and throw objects. Failure to observe the following safety instructions could result in serious injury or death.

WARNING: The engine exhaust from this product contains chemicals known to the state of California to cause cancer, birth defects or other reproductive harm.

DANGER: Your log splitter was built to be operated according to the rules for safe operation in this manual. As with any type of power equipment, carelessness or error on the part of the operator can result in serious injury. If you violate any of these rules, you may cause serious injury to yourself or others.

- Read the manual. Learn to operate this equipment in a safe manner.
- Do not under any circumstances alter this log splitter. This equipment was designed and engineered in accordance with operating instructions. Altering this equipment, or using this equipment in such a way as to circumvent its design capabilities and capacities, could result in serious injury or fatality and WILL VOID THE WARRANTY.
- Allow only responsible adults who have read this manual to operate this machine. Never allow children to operate this machine.
- Never use splitter for any other purpose than splitting wood. Any other use can result in injury. Your splitter is a precision piece of power equipment, not a toy. Therefore, exercise extreme caution at all times.
- Only a single operator is to load and operate the log splitter. Keep all others, including pets and children, a minimum of 20 feet away from your work area. More accidents occur when more than one person operates the log splitter than any other time.
- Always disconnect the spark plug wire and place the wire where it cannot contact the spark plug, to prevent accidental starting the engine when setting up, transporting, adjusting or repairing.
- Always wear protective gear such as safety goggles, protective hearing device, steel-toed shoes, and tight-fitting gloves without drawstrings or loose cuffs.
- Never wear loose clothing or jewelry that can be caught by moving parts of the splitter and pull you into it. Keep hair away from moving parts.
- Familiarize yourself with all of the controls in a safe environment before starting to work with this machine.

Fluid escaping from a very small hole can be almost invisible. Do not check for leaks with your hand. Escaping fluid under pressure can have sufficient force to penetrate skin, causing serious personal injury. Leaks can be located by passing a piece of cardboard or wood over the suspected leak and looking for discoloration. **IF injured by escaping fluid, see a doctor at once. Serious infection or reaction can develop if proper medical treatment is not administered immediately.**

- Split only one log at a time. Never attempt to split two logs on top of each other.
- Do not straddle or reach across the splitting area while operating the splitter.
- Do not step over splitter when the engine is running. You may trip or accidentally activate the splitting wedge. Walk around to get to the other side.
- Never place hands or feet between log and splitting wedge or between log and ram during forward or reverse stroke.
- Never attempt to load splitter while splitting wedge is in motion. When loading log splitter, place hands on the sides of the log, not the ends.
- Only use your hands to operate the control lever. Never use foot, knee, rope or any extension device.
- Always keep fingers clear of splits that open in log during splitter operation.
- When splitter is in the return mode, keep hands off the machine.
- Only operate splitter on level ground, not on the side of a hill. It could tip or rolling logs, poor footing, etc. could cause an accident.
- Never operate or allow someone to operate this equipment while under the influence of alcohol or drugs.
- Always block the wheels to prevent movement while using splitter.
- Never operate your splitter on wet, muddy, or icy surfaces. Safe footing is essential in preventing accidents.
- Never operate your splitter while it is attached to the tow vehicle.
- Never make adjustments or repairs with the engine running.
- Never attempt to split woods across the grain. Some types of wood may burst or fly out of your splitter and result in injury.
- Both ends of the log should be cut as squarely as possible to prevent the log from sliding out of the splitter during operation. Log length should be kept to 24” or less.

TOWING SAFETY

- Do not allow persons to ride on splitter. Do not carry any cargo or wood on your splitter. It may fall off and endanger vehicles that are following you.

- Be sure jack stand is in the travel position and coupling secure. This must also be retracted so not to interfere while towing. Retract kickstand by removing pin, rotating up, and replacing pin.

- Never exceed 45 MPH while towing your splitter. Be extra cautious when traveling over rough terrain, especially over railroad tracks.

- Always be careful while backing your splitter. You could jackknife your log splitter if not careful.

- Before using splitter, disconnect it from tow vehicle. A log could easily be p forward into the vehicle.

- See tire and wheel specifications for PSI while towing.

- Be aware of the extra length of splitter while turning, parking, crossing inters in all driving situations.

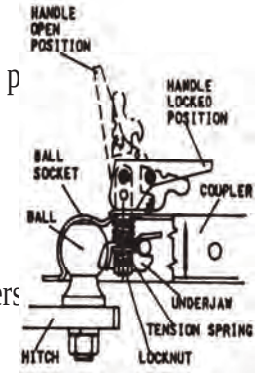

OPERATION INSTRUCTIONS
POSI-LOCK COUPLER

ADJUST COUPLER LOCKING PRESSURE ON BALL BEFORE USE. PLACE HANDLE IN LOCKED POSITION WITH BALL IN COUPLER. TIGHTEN LOCKNUT AGAINST TENSION SPRING SO THAT COUPLER IS NOT LOOSE ON BALL. CORRECT ADJUSTMENT WILL ALLOW HANDLE TO BE RELEASED WITH MODERATE PRESSURE APPLIED TO HANDLE.

TO OPEN, PULL UP ON COUPLER HANDLE AND ROTATE FORWARD. PLACE COUPLER ON BALL WHEN BALL IS COMPLETELY NESTED IN BALL SOCKET, ROTATE COUPLER HANDLE BACKWARD UNTIL

WARNING:

NEVER EXCEED WEIGHT CAPACITY AND ALWAYS USE SAFETY CHAINS. ALWAYS USE CORRECT BALL SIZE, MAKING SURE BALL IS COMPLETELY INSERTED INTO COUPLER. LOCK COUPLER HANDLE SECURELY BEFORE TOWING. ALWAYS CHECK FOR DAMAGES AND REPLACE IF DAMAGED. AVOID SHARP TURNS AND STEEP VERTICAL ANGLES WHEN TOWING.

SAFETY DECALS

Replace decals immediately if damaged.

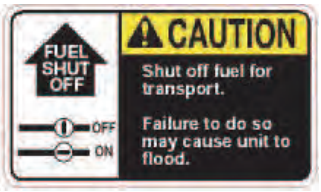

OD16 – FUEL SHUT OFF DECAL

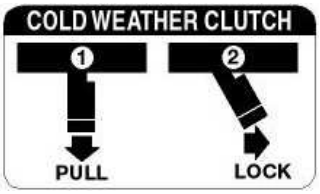

OD07 – COLD WEATHER DECAL

OD12 – HYDRAULIC FILL PLUG DECAL

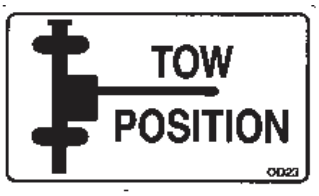

OD23 – TOW POSITION DECAL

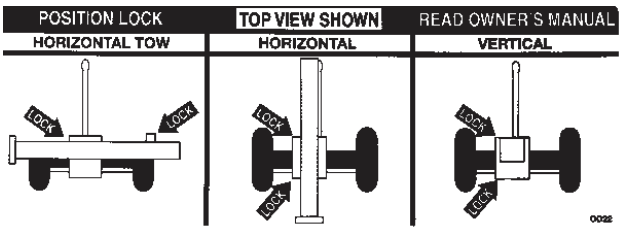

OD22 – POSITION LOCK DECAL

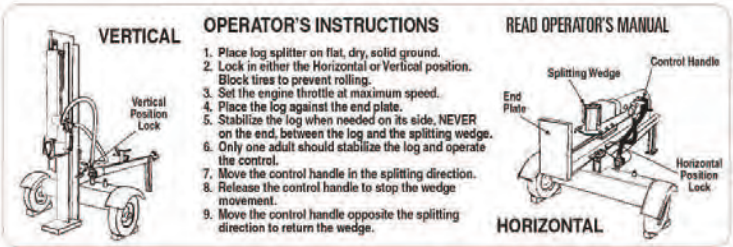

OD08 – OPERATOR INSTRUCTION DECAL

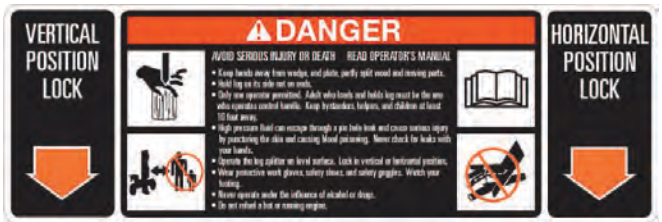

OD09 – DANGER/POSITION LOCK DECAL

FILLING THE HYDRAULIC RESERVOIR

Fill the hydraulic reservoir with at least five gallons of hydraulic fluid (22 ton, 26 ton, 34 ton standard models). Use at least seven gallons for the 34-ton deluxe models. After the hydraulic reservoir and the engine crankcase are filled correctly with their respective oils, start the engine. Remember to turn ON the key switch and fuel shut-off valve. The hydraulic pump should prime itself. With the engine running, move the hydraulic valve lever toward the wedge. This will cause the cylinder to extend and expel air. When the cylinder is fully extended, retract it. Repeat this procedure several times. An erratic movement of the cylinder indicates that there is still air in the system. More oil should then be added to bring the fluid level up to approximately 1" below the fill hole. After adding more oil to fill the tank, cycle the cylinder again until it has a constant speed indicating that all air has been expelled. Check the oil level in the reservoir again. Standard models require approx. 6.5 gallons of hydraulic fluid. Deluxe models require approx. 9 gallons of hydraulic fluid.

NOTE: If the tank is overfilled, it will tend to expel oil from the breather cap when the cylinder is retracted.

TOWING

This unit should not be towed on any street, highway, or public road without checking the existing federal, local, and state laws. Any licensing or modifications such as taillights, etc., need to comply with existing federal, local, or state vehicle requirements is the sole responsibility of the purchaser. Obey all regulations when towing on public roads and highways. See also **TOWING SAFETY**.

Be sure you are using the correct ball hitch size for the hitch coupler on the log splitter (2" ball). Be sure safety chains are properly connected. Leave enough slack in chains for turning. See **TOWING SAFETY** to read warnings about coupling.

Make sure beam attachment is locked in the horizontal position. NEVER tow splitter in the vertical position.

Turn the fuel shut-off valve OFF to prevent flooding of the engine while traveling.

TOWING AT NIGHT

The requirements for taillights are based on States regulations. Some states allow towing at night as long as the towed equipment does not visibly impair the tow vehicle taillights. This is based on a state, to state requirements. The customer is responsible for meeting the states requirements. A Taillight Kit Accessory (Part No.7420) is available and recommended for night driving.

If a "Statement of Origin" is required in your state, see your local dealer to receive one.

OPERATION

1. Set up the log splitter in a clear, level area and block the wheels. The suction port on the tank should always be on the lower side of the log splitter.
2. Place a log on the beam, against the foot plate. Make sure the log is securely on the foot plate and up against the beam.
3. Depress the valve lever so that the cylinder will drive the wedge into the log. Extend the cylinder until the log splits or to the end of its stroke. If the log has not completely split after the cylinder has reached the end of its extension, retract the cylinder. NOTE:

Leaving the valve in the "actuate" position at the end of the stroke may damage the pump.

OPERATION

Intended use: This log splitter is intended and designed to only split wood. NEVER use for any other purposes. Doing so can cause injury or VOID THE WARRANTY.

ASSEMBLY INSTRUCTIONS

This log splitter has been partially assembled at the factory. Refer to the drawings and part lists should it become necessary to disassemble the unit for repair or replacement of parts. Inspect all components for damage.

WARNING: Exercise extreme caution, as parts are very heavy. Sufficient persons or mechanical handling equipment should be used.

IMPORTANT: This unit is shipped without gasoline or oil in the engine. After assembly, see separate Engine Manual for proper fuel and oil recommendations.

1. General Assembly: Remove top, sides and ends of crate. Place crate panels aside to avoid puncturing tires. Remove tongue assembly from top. Deluxe models are bolted to the crate through the kickstand located by the engine. Remove this bolt and discard.
2. Carefully set the beam pre-assembly aside. Deluxe models are prepared at the factory.
3. Attach tongue to tank/mount plates using two bolts and nuts. Be certain hardware is secure. Deluxe models use only one bolt Fig.1.
4. Fender Assembly: Remove fenders from box. Mount to fender brackets with 5/16 hardware provided in plastic bag. Make sure fenders clear wheels.
5. Remove tank/engine assembly from base of crate and discard banding. The cylinder is tied to the base. Remove ties and slide cylinder/wedge forward aligning clevis at cylinder end to beam. Insert pin and retaining clips, check component to assure proper assembly. Stand beam pre-assembly vertical and secure in position. Roll tank/engine assembly into place, aligning pivot holes. Bolt with provided hardware. Note: Do not over tighten; this is the vertical/horizontal pivot point.
6. Pivot beam assembly into the horizontal position and lock with pin provided.
7. Hose Assembly: Locate the Pressure Hose, noted by the pipe fittings, and attach it to the lower fitting on the valve. The remaining hose attaches to the top fitting of the valve. Secure with provided hose clamp.
8. Check both the horizontal and vertical positions for any “kinks” in the hoses. Note: Always make sure beam is locked securely into place.

See **OPERATING POSITIONS** for Horizontal to Vertical Splitting

START UP

WARNING: DO NOT START OR RUN THE LOG SPLITTER WITHOUT OIL IN THE ENGINE AND HYDRAULIC RESERVOIR.

See separate Engine Manual for fuel and oil recommendations. Your log splitter has come equipped with a fuel shut-off valve for towing purposes.

Before starting engine make sure crankcase is filled correctly with oil and the proper fuel has been used. The engine will only start when the ignition key/ throttle lever (LS622 model) and fuel shut-off valve are turned to their ON positions.

COLD WEATHER START UP

The Cold Weather Clutch enables the engine to be started without having to pull through cold, thickened hydraulic fluid. Simply pull the handle out and slide into locked position. Start engine, let it warm up, and release Cold Weather Clutch.

OPERATING POSITIONS

WARNING: THE LOG SPLITTER BEAM IS HEAVY AND CAN PINCH HANDS/FINGERS IF CARE IS NOT TAKEN.

STANDARD HORIZONTAL TO VERTICAL

The Standard Splitter has 2 operating positions: Horizontal, Vertical.
Remove pin from below beam. Do not remove bolt and nut. Rotate beam into vertical position and pin so beam cannot fall into horizontal position.
DO NOT TOW IN VERTICAL POSITION!

DELUXE HORIZONTAL TO VERTICAL

WARNING: BE SURE PIVOT PIN IS IN POSITION BEFORE MOVING TO HORIZONTAL POSITION,
IT WILL TWIST OTHERWISE!

The Deluxe Splitter has 3 operating positions: Horizontal Travel, Horizontal, and Vertical.
Moving between horizontal positions: Remove pin shown in Fig.2. Rotate into position and pin
Fig.3. Moving from horizontal to vertical: Vertical position can only happen from the position in
Fig.3. Be absolutely sure swivel pin is secure thru bean and pivot weldment. Remove tilt pin and
Rotate beam into vertical position. Replace pin so beam cannot fall into vertical position and install
Additional vertical beam lock Fig.4.

IMPORTANT: When operating splitter in wooded areas, obtain a spark arrestor for the exhaust system. See your local engine dealer.

When preparing logs, cut ends as square as possible. The maximum length of any logs should be only 24".

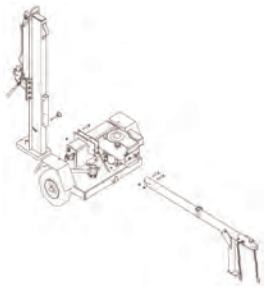

ASSEMBLY FIG.1

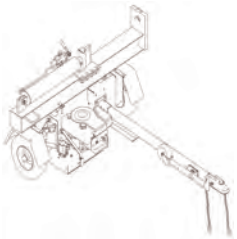

TRAVEL HORIZONTAL FIG.2

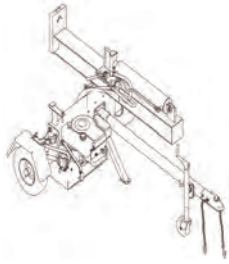

HORIZONTAL FIG.3

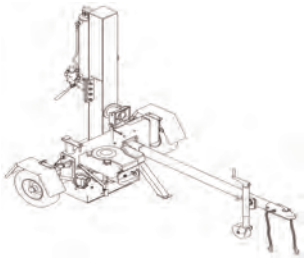

VERTICAL FIG.4

MAINTENANCE & STORAGE

WARNING: Disconnect spark plug before performing any maintenance or making adjustments.

RESERVOIR FLUID
Check the hydraulic fluid level in the reservoir tank before each use. Operating the log splitter without adequate oil supply will cause severe damage to the pump. Change the hydraulic fluid in the reservoir every 100 hours of operation. Disconnect the suction hose
from the bottom of the reservoir tank, and drain the fluid into a suitable container. Refill using only Dexron III automatic transmission fluid or 10 W AW hydraulic fluids.
Change the oil filter after the first 25 hours of operation. Thereafter, change the oil filter After every 100 hours or seasonally, whichever comes first.
Clean the breather cap after every 25 hours of operation. Clean it more often when operated in dusty conditions. To clean, remove cap and rinse it with either kerosene or liquid detergent to remove the dirt.

Be aware of the environment when disposing of used petroleum products. Please dispose of used hydraulic fluid, engine oil and any by products from the maintenance of your log splitter at approved recycling centers.

Should it become necessary to loosen or remove any hydraulic fitting or line, be sure to remove all pressure by shutting off the engine and moving the control handle back and forth several times.

NEVER remove the cap from the hydraulic tank or reservoir while your unit is running. Hot oil under pressure will cause injury.

Always store gasoline in an approved, tightly sealed container. Store container in a dry, cool place. Keep fuel away from gas appliances where fumes could contact open flame, pilot lights or sparks.

Do not operate your splitter in poor mechanical condition or when needing repair. Repair and replace worn or broken parts immediately.

Periodically tighten nuts, bolts, and hydraulic fittings.

Do not change the engine governor settings or over-speed the engine. The maximum Engine speed is preset by the manufacturer and is within safety limits. Adjusting settings will VOID THE WARRANTY.

The hydraulic system of your log splitter requires careful inspection, along with the mechanical parts. Be sure to replace frayed, kinked, or otherwise damaged hydraulic components.

The pressure relief valve on the splitter is preset at the factory. Do not adjust valve. Only a qualified service technician should perform this adjustment.

Completley drain the engine fuel tank prior to storage. Run engine until carburetor is empty.

Refer to the separate engine manual for all engine maintenance instructions.

If the wedge becomes dull or nicked, it can be removed and sharpened. The wedge is heavy and may still have sharp edges, wear gloves while handling the wedge.

REPAIR PARTS
Your Swisher Log Splitter has been produced with components designed specifically to this machine. Although standard springs, hardware, etc. may look familiar to parts used on other machinery, they may in some cases be made of a different construction and/or materials.

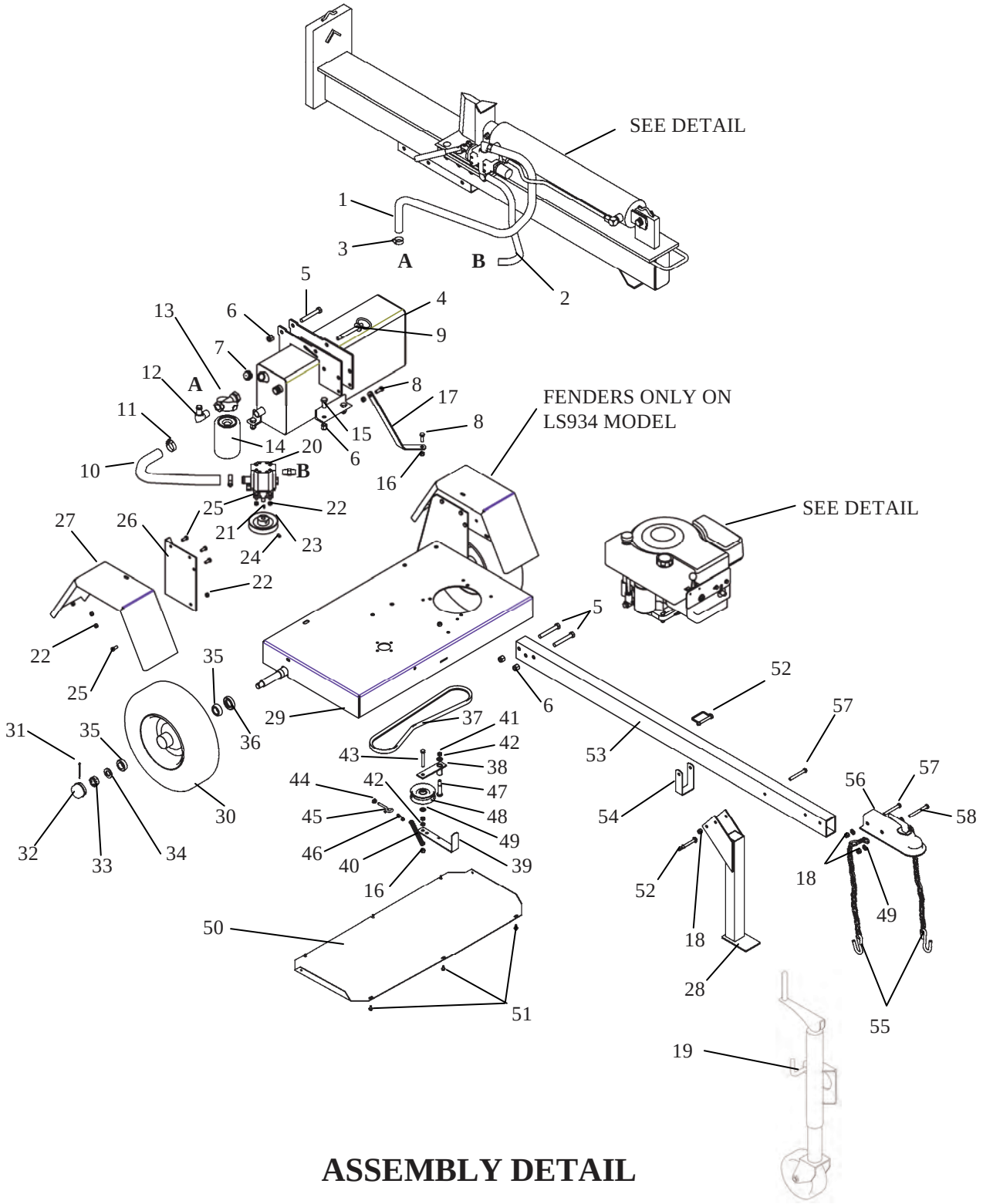

ASSEMBLY DETAIL

LS622, LS826, LS934 MODELS

NOT ALL PARTS ARE ON ALL MODELS

SERVICE PARTS

Please have Model and Serial Numbers ready when ordering parts.

Color cannot be guaranteed upon service parts.

ITEM NUMBER	DESCRIPTION	PART NUMBER
1	RETURN HOSE 54"	7290
2	PRESSURE HOSE 48"	15149
3	#12 HOSE CLAMP	LS5001
4	HYDRAULIC RESERVOIR	7319TC
5	1/2-13 X 3 1/2 GR5 BOLT	NB577
6	1/2-13 NYLOCK NUT	NB281
7	RESERVOIR VENT PLUG	7310
8	3/8-16 X 1 GR5 BOLT	NB604
9	1/2 X 3 1/2 HITCH PIN W/ HAIR PIN	NB648
10	SUCTION HOSE 18"	7346
11	#16 HOSE CLAMP	LS4999
12	RETURN LINE FITTING	7329
13	FILTER HEAD	LS1112
14	FILTER ELEMENT	LS1113
15	1/2-13 X 1 1/4 GR5 BOLT	NB647
16	3/8-16 2-WAY LOCK NUT	NB280
17	TANK BRACE	7352TK
18	3/8-16 NYLOCK NUT	NB182
20	HYDRAULIC PUMP - LS622 MODEL	12360
	HYDRAULIC PUMP - LS826 & LS934 MODELS	LS2002B
21	1/8 X 1/2 #3 WOODRUFF KEY	024002
22	5/16-18 2-WAY LOCK NUT	NB558
23	PUMP PULLEY	7306
24	SET SCREW W/ NYLOCK	NB312
25	5/16-18 X 3/4 GR2 BOLT	NB143
26	FENDER BRACKET - RIGHT SIDE - LS934 ONLY	7417TK
	FENDER BRACKET - LEFT SIDE - LS934 ONLY	7418TK
27	FENDER - LS934 ONLY	7428TK
28	KICKSTAND	7398TK

SERVICE PARTS

Pleas have Model and Serial Numbers ready when ordering parts.

Color cannot be guaranteed upon service parts.

ITEM NUMBER	DESCRIPTION	PART NUMBER
29	MOTOR BASE / AXLE	7297TK
30	TIRE / WHEEL	7296
31	COTTER PIN	NB633
32	WHEEL DUST COVER	2203DC
33	CASTLE NUT	2203CN
34	WASHER	NB184
35	TAPERED BEARING	2203B
36	BEARING SEAL	2203S
37	BELT	644
38	IDLER ARM	6681TK
39	CLUTCH LEVER	7358TK
40	SPRING	682S
41	3/8-16 JAM NUT	NB174
42	HARDENED WASHER	NB196
43	3/8-16 X 2 1/2 GR5 BOLT	NB619
44	5/16-18 FLANGE NUT	NB170
45	IDLER SPRING MOUNT	2046
46	WIRE LINK FOR IDLER SPRING	BRS6H
47	SHOULDER BOLT	NB220
48	IDLER PULLEY	B527
49	WASHER	NB272
50	BELT COVER	7321TK
51	#14 x 3/4 SELF-TAPPING SCREW	NB161
52	SAFETY CLIP PIN	H11
53	TOWING TONUGE	7343TK
	TOWING TONGUE - LS934 & LS10534D	7168TK
54	TRAVEL LOCK	7441TK
55	SAFETY CHAIN W/ HOOK	7366
56	2" BALL COUPLER	7365
57	3/8-16 X 3 GR5 BOLT	NB164
58	3/8-16 X 3 1/2 GR5 BOLT	NB649

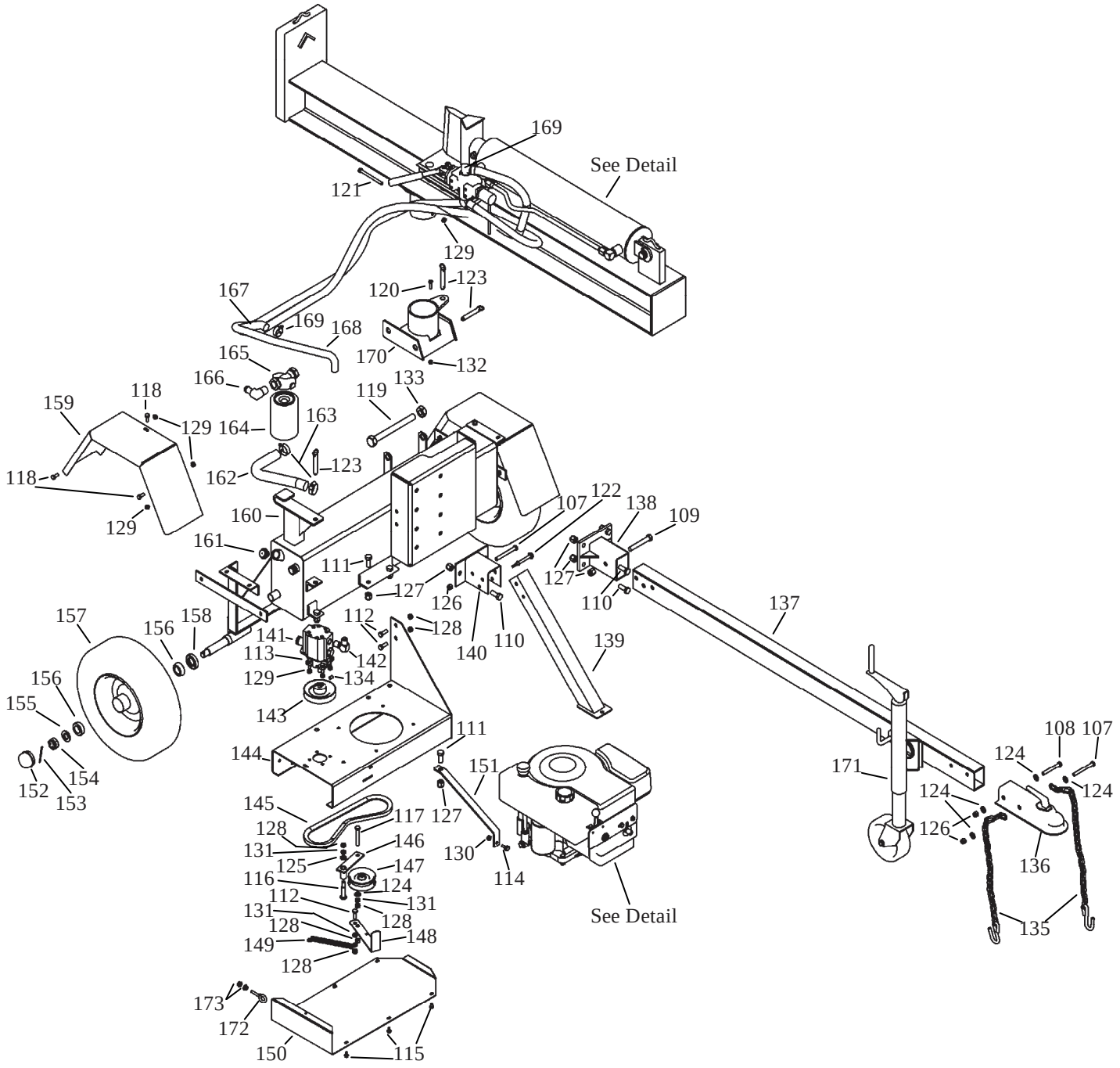

ASSEMBLY DETAIL

MODEL LS10534D

NOT ALL PARTS ARE ON ALL MODELS

SERVICE PARTS

Please have Model and Serial Numbers ready when ordering parts.

Color cannot be guaranteed upon service parts.

ITEM NUMBER	DESCRIPTION	PART NUMBER
107	3/8-16 X 3 1/2 GR5 BOLT	NB649
108	3/8-16 X 3 GR5 BOLT	NB164
109	1/2-13 X 3 1/2 GR5 BOLT	NB577
110	1/2-13 X 1 1/4 GR5 BOLT	NB647
111	1/2-13 X 1 1/4 GR5 BOLT	NB646
112	3/8-16 X 1 GR5 BOLT	NB604
113	5/16-18 X 1 GR5 BOLT	NB501
114	5/16-18 X 3/4 FLANGE BOLT	NB596
115	#14X 3/4 SELF TAPPING SCREW	NB161
116	SHOULDER BOLT	NB220
117	3/8-16 X 2 1/2 GR5 BOLT	NB221
118	5/16-18 X 3/4 GR2 BOLT	NB143
119	3/4-10 X 7 1/2 GR5 BOLT	NB655
120	1/4-20 X 1 GR5 BOLT	NB102
121	5/16-18 X 4 GR5 BOLT	NB513
122	SAFETY CLIP PIN	H11
123	1/2 X 2 1/2 BALL LOCK PIN	NB651
124	WASHER	NB272
125	HARDENED WASHER	NB196
126	3/8-16 NYLOC NUT	NB182
127	1/2-13 NYLOC NUT	NB281
128	3/8-16 2 WAY LOCK NUT	NB280
129	5/16-18 2 WAY LOCK NUT	NB558
130	5/16-18 NYLOC NUT	NB181
131	3/8-16 JAM NUT	NB174
132	1/4-20 NYLOC NUT	NB180
133	3/4-10 NYLOC NUT	NB609
134	SET SCREW W/ NYLOC	NB312
135	SAFETY CHAIN W/ HOOK	7366
136	2" BALL COUPLER	7365
137	TONGUE	7168TK
138	TUBE RECIEVER	7362TK
139	KICKSTAND	7386TK
140	KICKSTAND BRACKET	7385TK
141	HYDRAULIC PUMP	LS2002B

SERVICE PARTS

Please have Model and Serial Numbers ready when ordering parts.

Color cannot be guaranteed upon service parts.

ITEM NUMBER	DESCRIPTION	PART NUMBER
142	HYDRAULIC ELBOW	7291
143	PUMP PULLEY	7306
144	MOTOR BASE	7399TK
145	BELT 32.5	7345
146	IDLER ARM	6681TK
147	IDLER PULLEY	B527
148	CLUTCH LEVER	7358TK
149	SPRING	682S
150	BOTTOM COVER	7336TK
151	MOTOR BASE SUPPORT ARM	7375TK
152	DUST COVER	2203DC
153	COTTER PIN	NB633
154	CASTLE NUT	2203CN
155	WASHER	NB184
156	TAPERED BEARING	2203B
157	TIRE & WHEEL	7296
158	BEARING SEAL	2203S
159	FENDER	7428TK
160	DELUXE TANK WELDMENT	7400TC
161	RESERVOIR VENT PLUG	7379
162	14" SUCTION HOSE	7419
163	#16 HOSE CLAMP	LS4999
164	FILTER ELEMENT	LS1113
165	FILTER HEAD	LS1112
166	FITTING RETURN LINE	7329
167	82" RETURN HOSE	7326
168	90" PRESSURE HOSE	7325
169	#12 HOSE CLAMP	LS5001
170	PIVOT	7402TC
171	TRAILER JACK/ SNAP RING	7167 / 7367SR
172	ROPE GUIDE	2046
173	5/16-18 FLANGE NUT	NB170
NOT SHOWN	BEAM LOCK	7439TK
NOT SHOWN	COMPRESSION SPRING	7429
NOT SHOWN	Pin - Cotter, 1/8 X 1	NB126

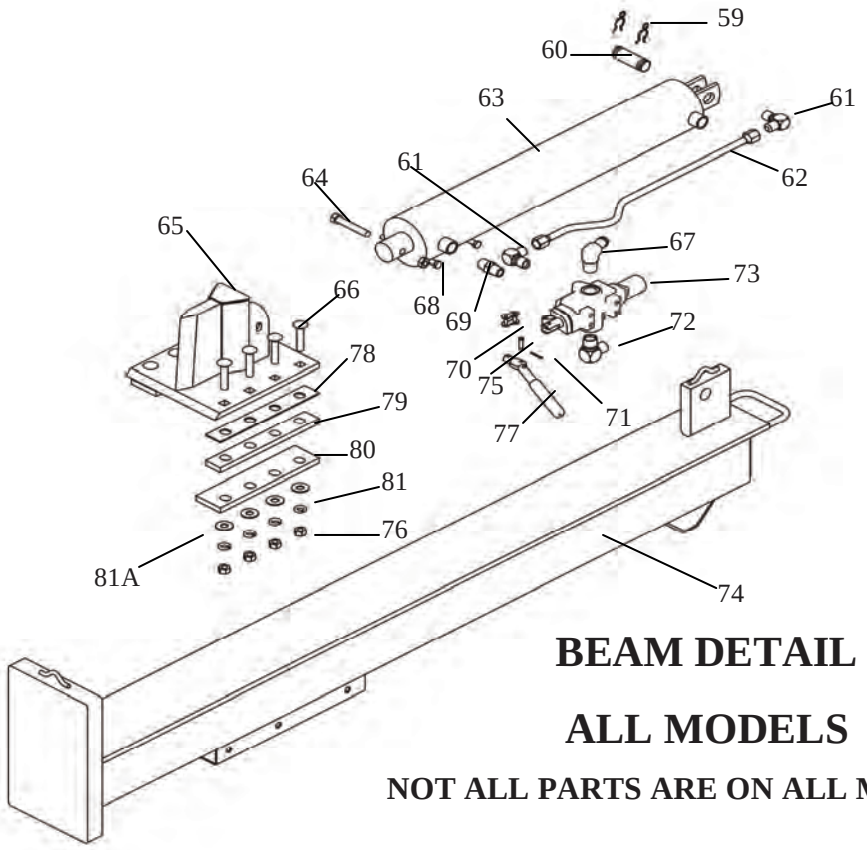

BEAM DETAIL

ALL MODELS

NOT ALL PARTS ARE ON ALL MODELS

ITEM NUMBER	DESCRIPTION	PART NUMBER
59	CLIP PIN	NB642
60	STEEL PIN	7293
61	HYDRAULIC FITTING	7291
62	STATIONARY LINE ASSEMBLY	7288TK
63	RAM CYLINDER - LS622 MODEL	7284TC
	RAM CYLINDER - LS826 MODEL	7354TK
	RAM CYLINDER - LS934 & LS10534 MODELS	7355TK
64	1/2-13 X 3 GR5 BOLT	NB131
65	SPLITTING WEDGE	7233TK
66	1/2-13 X 2 1/2 GR5 CARRIAGE BOLT	NB643
67	RETURN LINE FITTING	7329
68	1/2-13 JAM 2-WAY LOCK NUT	NB121
69	2-WAY PIPE NIPPLE	7292
70	MASTER CHAIN LINK	7424
71	COTTER PIN	NB597
72	VALVE INLET FITTING	7387
73	VALVE CONTROL W/ LEVER	7287TK
74	BEAM WELDMENT	7624TC
	BEAM WELDMENT - DELUXE MODELS	7384TC
75	1/4 X 1 CLEVIS PIN	NB522
76	1/2-13 NUT	NB213Z
77	VALVE LEVER & GRIP	7423/7425
78	THIN GIB PLATE	7388TK
79	THICK GIB PLATE	7237TK
80	BOTTOM GIB PLATE	7333TK
81	LOCK WASHER	NB508
81A	FLAT WASHER	NB555

ENGINE DETAIL

LS826, LS934, LS10534D MODELS

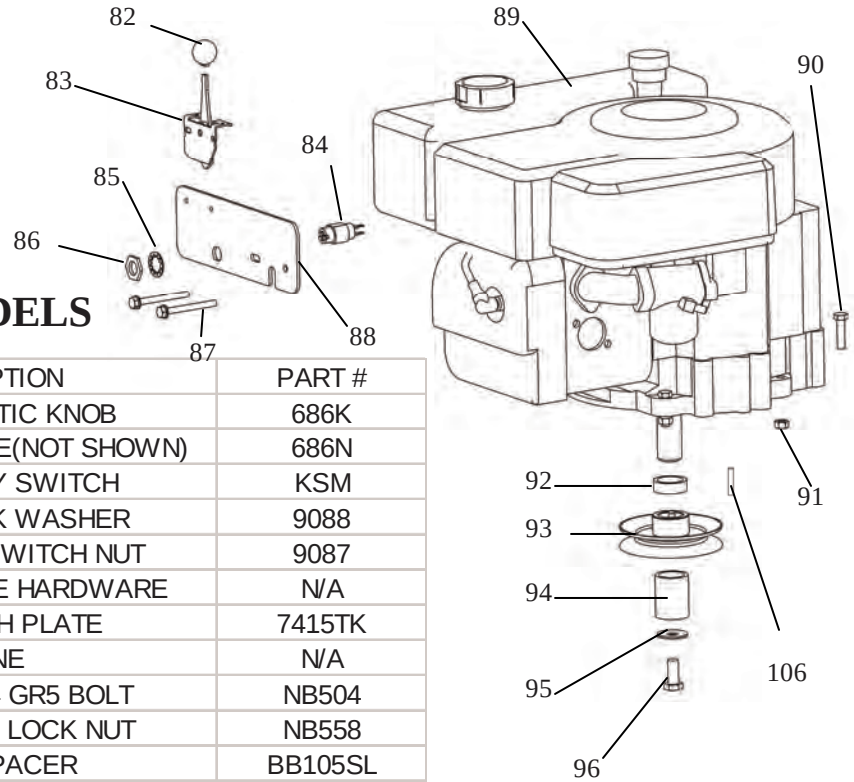

ITEM #	DESCRIPTION	PART #
82	BLACK PLASTIC KNOB	686K
83	THROTTLE & CABLE(NOT SHOWN)	686N
84	ON - OFF KEY SWITCH	KSM
85	GOLDEN LOCK WASHER	9088
86	GOLDEN KEY SWITCH NUT	9087
87	EXISTING ENGINE HARDWARE	N/A
88	KEY SWITCH PLATE	7415TK
89	ENGINE	N/A
90	5/16-18 X 1 1/4 GR5 BOLT	NB504
91	5/16-18 2-WAY LOCK NUT	NB558
92	UPPER SPACER	BB105SL
93	ENGINE PULLEY	BB105
94	LOWER SPACER	BB105S
95	BELLEVILLE WASHER	699
96	7/16-20 X 1 GR5 BOLT W/ NYLOCK	NB452N
106	KEYSTOCK	9031
NOTSHOWN	WIRING HARNESS	7416
NOTSHOWN	THROTTLE PLATE/ SCREWS	686P/NB137

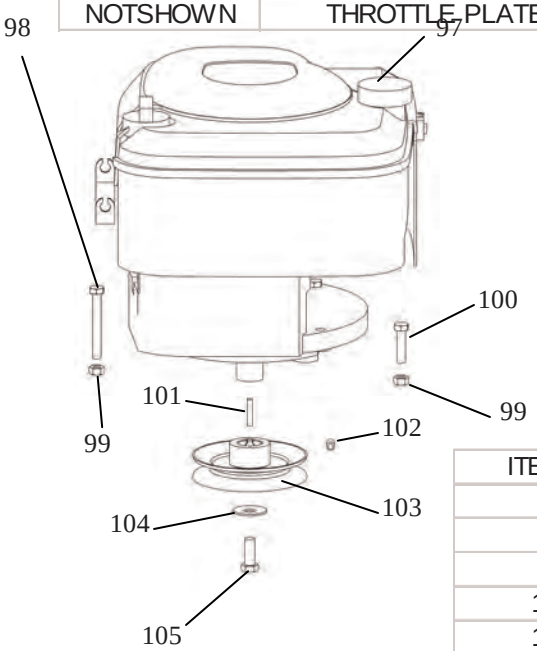

ENGINE DETAIL

LS622 MODEL

ITEM #	DESCRIPTION	PART #
97	ENGINE	N/A
98	5/16-18 X 2 1/2 GR5 BOLT	NB138
99	5/16-18 2-WAY LOCK NUT	NB558
100	5/16-18 X 1 1/4 GR5 BOLT	NB504
101	KEYSTOCK	9030
102	SET SCREW W/ NYLOCK	NB312
103	ENGINE PULLEY - LS622	7323
104	BELLEVILLE WASHER	699
105	3/8-24 X 1 BOLT W/ NYLOCK	NB238N

	Models			
	LS622	**LS8526**	**LS934**	**LS10534D**
Splitting Force	22 Tons	26 Tons	34 Tons	34 Tons
Engine	6 Hp Briggs and Stratton Quantum	8.5 HP Briggs and Stratton	9 HP Briggs and Stratton I/C	10.5 HP Briggs and Stratton I/C
Splitting Positions	Horizontial and Vertical	Horizontial and Vertical	Horizontial and Vertical	2 Horizontial and Vertical
Cylinder Size	4" X 24"	4 1/2" X 24"	5" X 24"	5" X 24"
Pump	2 Stage with Heavy Duty Bearings	2 Stage with Heavy Duty Bearings	2 Stage with Heavy Duty Bearings	2 Stage with Heavy Duty Bearings
Pump Specs	11 Gallons Per Minute	16 Gallons Per Minute	16 Gallons Per Minute	16 Gallons Per Minute
Valve	Auto Return	Auto Return	Auto Return	Auto Return
Drive System	Belt Drive 1:1 Ratio with Clutch for Easy Starting	Belt Drive 1:1 Ratio with Clutch for Easy Starting	Belt Drive 1:1 Ratio with Clutch for Easy Starting	Belt Drive 1:1 Ratio with Clutch for Easy Starting
Oil Capacity	6.5 Gallon	6.5 Gallon	6.5 Gallon	9 Gallon
Maximum Log length	24"	24"	24"	24"
Tire Specs	4.00 X 4.80 X 8 with High Speed Bearings	4.00 X 4.80 X 8 with High Speed Bearings	4.00 X 4.80 X 8 with High Speed Bearings	4.00 X 4.80 X 8 with High Speed Bearings
Metal Fenders	No	No	Yes	Yes
Ball Hitch	2" Ball	2" Ball	2" Ball with Trailer Jack	2" Ball with Trailer Jack
Unit Weight	515 Lbs	535 Lbs	545 Lbs	615 Lbs

OWNER'S MANUAL

MODEL NO.
LS622
LS826
LS934
LS10534D

LOG SPLITTER

HOW TO ORDER REPAIR PARTS:

Each Log Splitter has its own serial number. Each engine has its own serial number. The serial number for the Log Splitter will be found on the right hand side of the hydraulic oil reservoir. The serial number for the engine will be found on the top of the blower fan housing.
All Log Splitter parts listed herein may be ordered directly from Swisher Mower & Machine Co. Inc., your nearest Swisher dealer, or from our website.
All engine parts may be ordered from the nearest dealer of the engine supplied with your mower. Parts subject to change without notice.

WHEN ORDERING PARTS, PLEASE HAVE THE FOLLOWING INFORMATION AVAILABLE:

* PRODUCT – SWISHER LOG SPLITTER
* SERIAL NUMBER - _____
* MODEL NUMBER - _____
* ENGINE MODEL NUMBER - _____
  TYPE - _____
* PART NUMBER
* PART DESCRIPTION

www.swisherinc.com
TELEPHONE - 1-800-222-8183
FAX - 1-660-747-8650

SWISHER MOWER & MACHINE CO. INC.
1602 CORPORATE DRIVE
WARRENSBURG, MO 64093

SWISHER MOWER & MACHINE CO. INC.