swisherinc.com

OWNER'S MANUAL

Starting serial number:
L112-027001

MODEL NO.

PST67522
PST67522-CA
PST67522A
PST67522A-CA

CAUTION:
Read and follow all Safety Rules and Instructions Before Operating This Equipment

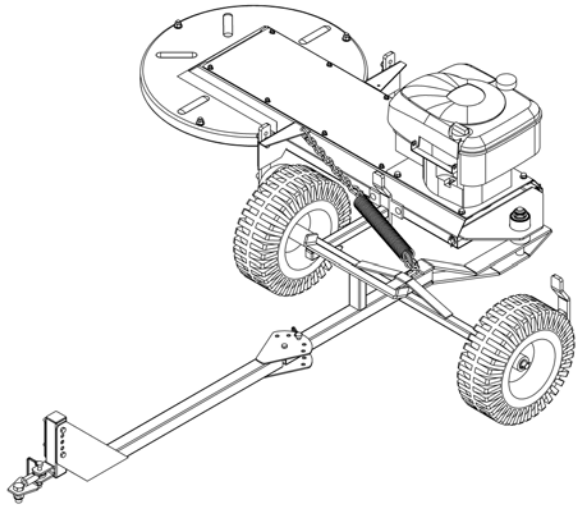

POSTMASTER

TOW MOWER & FENCE POST TRIMMER

Assembly
Operation
Service and Adjustment
Repair Parts

1602 CORPORATE DRIVE, WARRENSBURG, MISSOURI 64093
PHONE (660) 747-8183 FAX (660) 747-8650

Manufacturing quality lawn care equipment since 1945

Made In The ***USA***

ONPM03
REV 12-027

LIMITED WARRANTY

The manufacturer's warranty to the original consumer purchaser is: This product is free from defects in materials and workmanship for a period of one year from the date of purchase by the original consumer purchaser. We will repair or replace, at our discretion, parts found to be defective due to materials or workmanship. This warranty is subject to the following limitations and exclusions:

1)	Engine Warranty	All engines utilized on our products have a separate warranty extended to them by the individual engine manufacturer. Any engine service difficulty is the responsibility of the engine manufacturer and in no way is Swisher or its agents responsible for the engine warranty. The Briggs & Stratton Engine Service Hot-Line is 1-800-233-3723. The Tecumseh Engine Service Hot-Line is 1-800-558-5402. The Honda Engine Service Hot-Line is 1-800-426-7701.
2)	Commercial Use	This product is not intended for commercial use and carries no commercial warranty.
3)	Limitation	This warranty applies only to products which have been properly assembled, adjusted, and operated in accordance with the instructions contained within this manual. This warranty does not apply to any product of Swisher that has been subject to alteration, misuse, abuse, improper assembly or installation, shipping damage, or to normal wear of product.
4)	Exclusions	Excluded from this warranty are normal wear, normal adjustments, and normal maintenance.

In the event you have a claim under this warranty, you must return the product to an authorized service dealer. All transportation charges, damage, or loss incurred during transportation of parts submitted for replacement or repair under this warranty shall be borne by the purchaser. Should you have any questions concerning this warranty, please contact us toll-free at 1-800-222-8183. The model number, serial number, date of purchase, and the name of the authorized Swisher dealer from whom you purchased the mower will be needed before any warranty claim can be processed.
THIS WARRANTY DOES NOT APPLY TO ANY INCIDENTAL OR CONSEQUENTIAL DAMAGES AND ANY IMPLIED WARRANTIES ARE LIMITED TO THE SAME TIME PERIODS STATED HEREIN FOR ALL EXPRESSED WARRANTIES. Some states do not allow the limitation of consequential damages or limitations on how long an implied warranty may last, so the above limitations or exclusions may not apply to you. This warranty gives you specific legal rights and you may have other rights, which vary from state-to-state. This is a limited warranty as defined by the Magnuson-Moss Act of 1975.

TABLE OF CONTENTS

WARRANTY……...….2
SAFETY……3
ASSEMBLY……..…….4
OPERATION…….……4-7
TRIMMER MAINTENANCE...….……8
PARTS BREAKDOWN……9-11

SAFETY PRECAUTIONS & DECALS

This Safety Alert Symbol indicates important messages in this manual. When you see this symbol, carefully read the message that follows and be alert to the possibility of personal injury.

Read this manual completely. This machine can amputate hands and feet, and throw objects. Failure to observe the following safety instructions could result in serious injury or death.

- Read the manual. Learn to operate this machine safely.
- Always disconnect the spark plug wire and place the wire where it cannot contact the spark plug, to prevent accidental starting the engine when setting up, transporting, adjusting or making repairs.
- Keep all shields and guards in place.
- Understand the speed, steering and stability of this machine. Know the positions and operations of all controls before you operate this machine. Check all of the controls in a safe area before starting to work with this machine.
- Allow only responsible adults who are familiar with these instructions to operate this machine. **Never allow children to operate this machine.**
- Clear the area of objects such as rocks, toys, wire, etc. that can be picked up and thrown by the blade.
- Be sure the area is clear of other people before mowing. Be aware of the mower discharge direction and do not point at anyone. **Stop the machine** if anyone enters the mowing area. Children are often attracted to the machine and the mowing activity. ***Never assume that children will remain where you last saw them.*** Keep children under the watchful care of another responsible adult.
- **No riders!**
- Do not put hands or feet near or under rotating parts.
- Do not mow in reverse. **Always look down and behind before and during backing.**
- Turn off the unit when not mowing. Before leaving the machine, turn off the unit and stop the engine.
- Watch for traffic when operating near or crossing roadways.
- Do not operate the mower if it has been dropped or damaged in any manner or if the mower vibrates excessively. Excessive vibration is an indication of damage. Repair mower as necessary.
- Dress properly. Do not operate the mower when barefoot or wearing open sandals. Wear only solid shoes with good traction when mowing.
- Never allow operation by untrained persons.
- Do not operate the machine while under the influence of alcohol or drugs.
- Do not operate on slopes greater than 15 degrees.
- Never tamper with safety devices. Check their proper operation regularly.
- Stop and inspect the equipment if you strike an object. Repair, if necessary, before restarting. Never make adjustments or repairs with the engine running.
- Do not operate at too fast a rate.

OD45- Warning Serious Injury Decal

OD55- Danger- Triangle Decal

ASSEMBLY

- Disconnect spark plug wire from spark plug and place where it cannot make a connection.
- All engines are filled with oil at the factory. Verify oil level and add if necessary before starting engine. (See Engine Owner's Manual)
- Verify fuel level and add if necessary before starting engine.
- Attach swivel hitch(H10TK) to L-Hitch(P/N H1), (See p.10). Then connect trimmer to tow vehicle.
- Install trimmer string to spinner weldment (P/N 2021TC). See p.5 for installation instructions.
- Reconnect spark plug wire.
- For proper operating procedures, Read pp. 4-7.

OPERATING YOUR NEW CUTTER

The operation of any mower can produce foreign objects to be thrown into the eyes, resulting in severe eye damage. Always wear certified safety glasses or wide-vision safety goggles over spectacles before staring any cutting machine and while operating such a machine.

The operation of any cutter produces sound waves that are damaging to the human ear. Ear protection is recommended.

CAUTION!
Tragic accidents can occur if the operator is not alert to the presence of children. Children are often attracted to the machine and the mowing activity. ***Never assume that children will remain where you last saw them.***

SLOPE OPERATION!
Use extra caution when mowing on slopes. Operate self-propelled units up and down slopes. There is a significant risk of overturns when operating across slopes. If you feel uneasy on a slope then **do not** mow it.

INTENDED USE

This is not a lawn mower. The Postmaster is designed to trim along fence rows, tree rows, etc. The Postmaster has been designed to run offset to either side and also offset from the center of the tow vehicle to provide additional cutting width.

STOPPING THE ENGINE

- Slide the throttle into the "STOP" position.
- Return unit to travel position.

INSTALLING STRING (Refer to OD63- String Diagram Decal)

- Use proper length string. Using a string too long for the unit will cause stalling and unacceptable operation.
- Remove any built-up debris gathered in string holder.
- Fold string in half, creating a balanced loop.
- Place loop of string against outside of loop on trimmer head.
- Bring ends around and through the loop and over the string loop.
- Pull ends to tighten loop
- Cut string off evenly with outside diameter of the cover to protect fence posts and other items being trimmed.

OD63- String Diagram Decal

STARTING THE ENGINE

- Remove any built-up debris from engine.
- Remove trimmer from travel rest and assemble into desired position.
- Check oil & fuel.
- Prime engine as directed. Note: A warm engine may not need to be primed.
- Slide throttle into "FAST" position.
- Pull engine coil rope. Do not pull recklessly.
- Adjust throttle to desired engine RPM. For maximum results, operate in the full throttle position.

PREPARING FOR FIRST USE

- Check engine crankcase for oil. Check with engine dipstick. Do not overfill. See engine manual for proper oil level.
- Fill fuel tank with fresh gasoline. Never fill tank in an enclosed area!
- Check to ensure string has been installed correctly.
- Start trimmer as directed above.
- Under supervision, allow strings to rotate and engine to idle for 5 minutes. This breaks-in the engine and the belt.
- Stop engine.

BEGIN TRIMMING

- Make sure area is clear of all bystanders.
- Make sure that all guards, belt guides, and the spark plug wire are properly attached.
- Start engine, setting desired engine speed. **Note: This machine is designed to operate at maximum engine speed.**
- Start trimming in a low gear. Some bounce may occur when trimmer is returning into position. Use caution.

BACKING THE UNIT

- See Transporting.

TRANSPORTING

- Stop engine and remove wire from spark plug.
- Wait for all moving parts to come to a complete stop.
- Place unit into travel position.
- This position is recommended while backing the unit.

•**CUTTING HEIGHT**

- There are five height settings.
- Stop engine.
- Place unit into travel mode to make adjustments.
- Pull the hairpins and clevis pins out and set both rollers at equal settings.
- Replace hardware.

TENSION ADJUSTMENT

- Spring return-tension should be increased before trimming dense-grass areas.
- **Always stop engine while making adjustments.**
- Place unit into travel position to make adjustments.
- Move snap hook on chain closer to spring to increase tension.
- Move snap hook to the end furthest from spring to lessen tension.
- **Always have chain and spring attached at both ends.**

HITCH OFFSET ADJUSTMENT

- Take unit out of travel position.
- Pull ball-lock-pin out of hitch, pivot hitch left or right into the desired offset.
- Replace pin securely, assuring that it locks into position.
- Offset to the opposite side by un-hooking chain connector on the roller bracket. Pivot deck around to other side and re-attach to opposite roller bracket.

CAUTION!
SHUT OFF ENGINE AND REMOVE WIRE FROM SPARK PLUG BEFORE MAKING ANY ADJUSTMENTS TO THE UNIT.

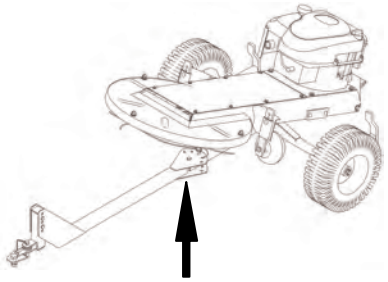

Ball-Lock-Pin
TRAVEL POSITION

SUGGESTED PRACTICES

- Always operate engine at full throttle when cutting to assure the best cutting performance and proper discharge of material.
- Offset unit to the right-hand side whenever possible (as shown). Debris is thrown away from the operator.
- If grass is wet, allow it to dry. Wet grass will clump and collect, clean unit regularly.
- When cutting dense areas go slow. Some dense areas may need to be gone over twice.
- Do not operate trimmer if it vibrates abnormally. Excessive vibration is a sign of damage. Stop the engine and safely check for damage. Repair as necessary.
- For best results, Do not insert cutting head more than halfway through the fence line.

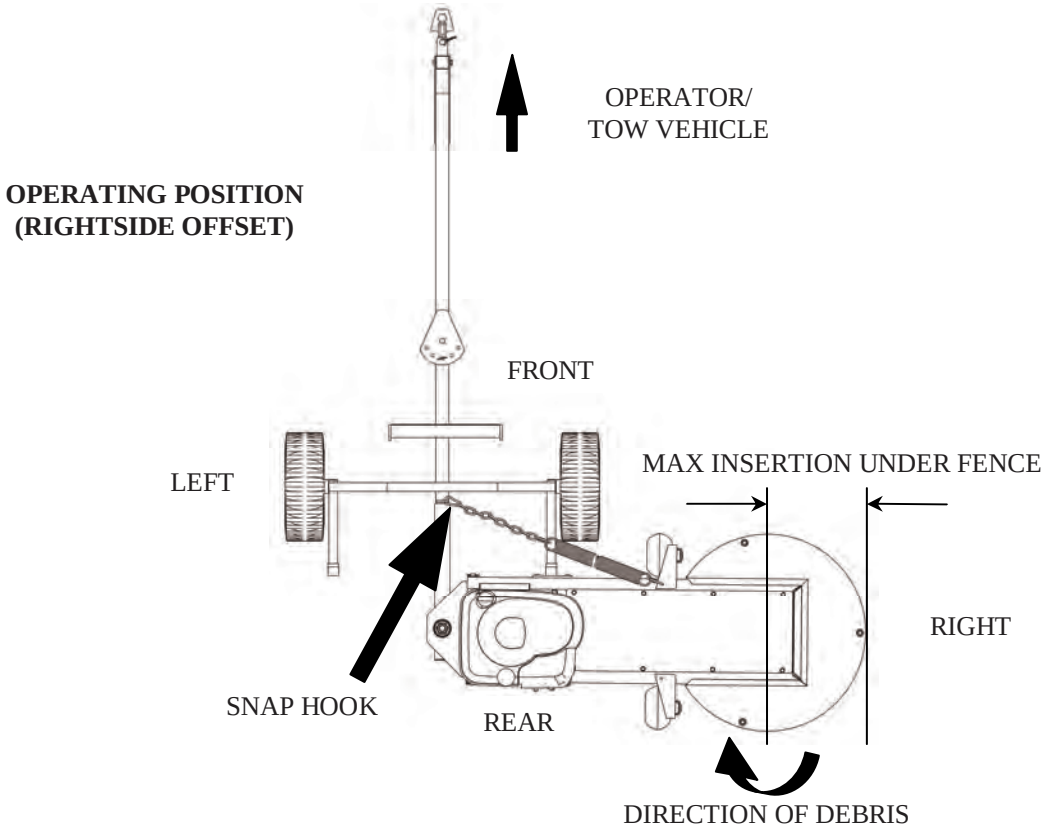

TRIMMER MAINTENANCE & SERVICE

CAUTION!
SHUT OFF ENGINE AND REMOVE WIRE FROM SPARK PLUG BEFORE MAKING ANY ADJUSTMENTS TO THE UNIT.

USE PROPER TOOLS FOR ANY ADJUSTMENTS, DISASSEMBLY, OR REPAIRS.

STORAGE

- Do not store engine indoors or other poorly ventilated areas.
- If unit is to be stored for longer than 30 days, prepare as directed below:
  Drain fuel outside into an approved container.
  Start engine and run until unit is completely out of fuel. Removing fuel prevents gum deposits from forming inside carburetor. Gum deposits can malfunction the engine.
  Let engine cool.

SEASONAL MAINTENANCE

- Replace the spark plug.
- Clean or replace the air filter and fuel filter.
- Change oil.
- Check belts, tires, hardware, etc. for wear and damage. Repair as necessary.
- New spark plug, clean air filter, and clean fuel filter assure proper air-fuel mixture and help engine perform better and last longer.

BEFORE EACH USE

- Check and fill engine oil on a level surface. If oil appears black or soiled, change immediately.
- Check condition of filters, spark plug, tires, etc. Clean or replace if necessary.
- Replace/repair strings as necessary.
- Check for loose hardware and tighten as needed.

BELT REPLACEMENT

- Stop engine and remove wire from spark plug.
- Remove belt cover.
- Move idler pulley to free belt and hold.
- Remove old belt.
- Install new belt. Start at the engine pulley and work the belt around the drive pulley and onto the backside of the idler pulley.
- Release idler pulley.
- Replace belt cover.

BELT CONFIGURATION

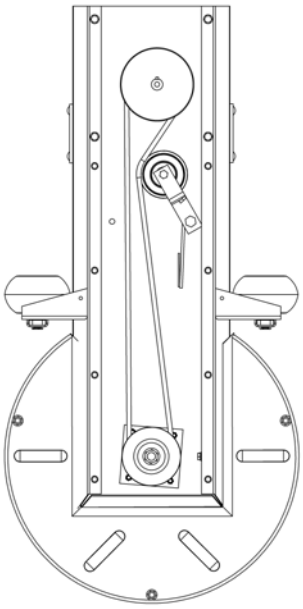

MAIN BODY ASSEMBLY

FIGURE 1

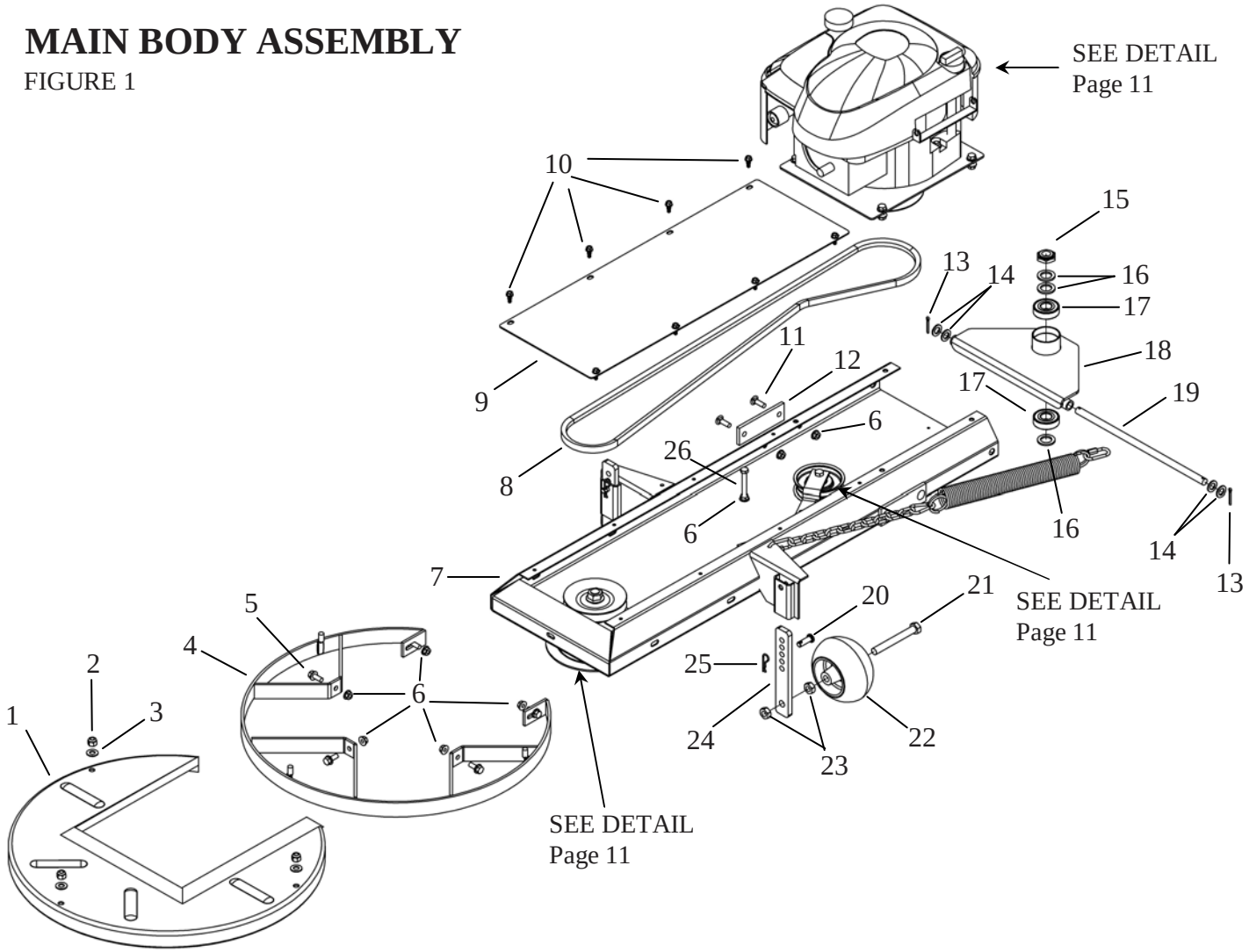

Item #	Description	Part #
1	Plastic Cover	3526
2	3/8-16 Nyloc Nut	NB182
3	3/8 SAE Washer	NB272
4	Guard Weldment	3532TK
5	5/16-18 X 3/4 Serr Flng Bolt	NB596
6	5/16-18 Serrated Flng Nut	NB170
7	Motor Base	3548TC
8	Belt 74"	4220
9	Belt Cover	3501TC
10	#14 X 3/4 HX Tek Screw ZP	NB161
11	5/16-18 X 1 Carriage Bolt	NB516
12	Wear Strip	3519
13	1/8 X 1 Cotter Pin	NB126

Item #	Description	Part #
14	1/2 NR Mach Bushing 14 GA	NB177
15	3/4-16 Jam Nylok Nut	NB122
16	13/16 X 1 1/4 X 1/8 Washer	NB195
17	Blade Bearing	B98
18	Pivot Weldment	3530TK
19	Pivot Bar (Zinc Plated)	3504Z
20	Clevis Pin Std Zp 3/8 X 1 1/8	NB300
21	1/2-13 X 4 HCCGR5ZP	NB132
22	Gauge Wheel	3511
23	1/2-13 2-Way Jam Lock Nut	NB121
24	Height Adjust Bar	3515TK
25	#3 Hair Pin (A155H)	NB127
26	5/16-18 X 2 3/4 HCCGR2ZP	NB106

When ordering replacement parts

* = USE PAINT CODE:

TC=TEX.RED,S=SLIVER,TK=TEX.BLACK

HITCH FRAME ASSEMBLY

FIGURE 2

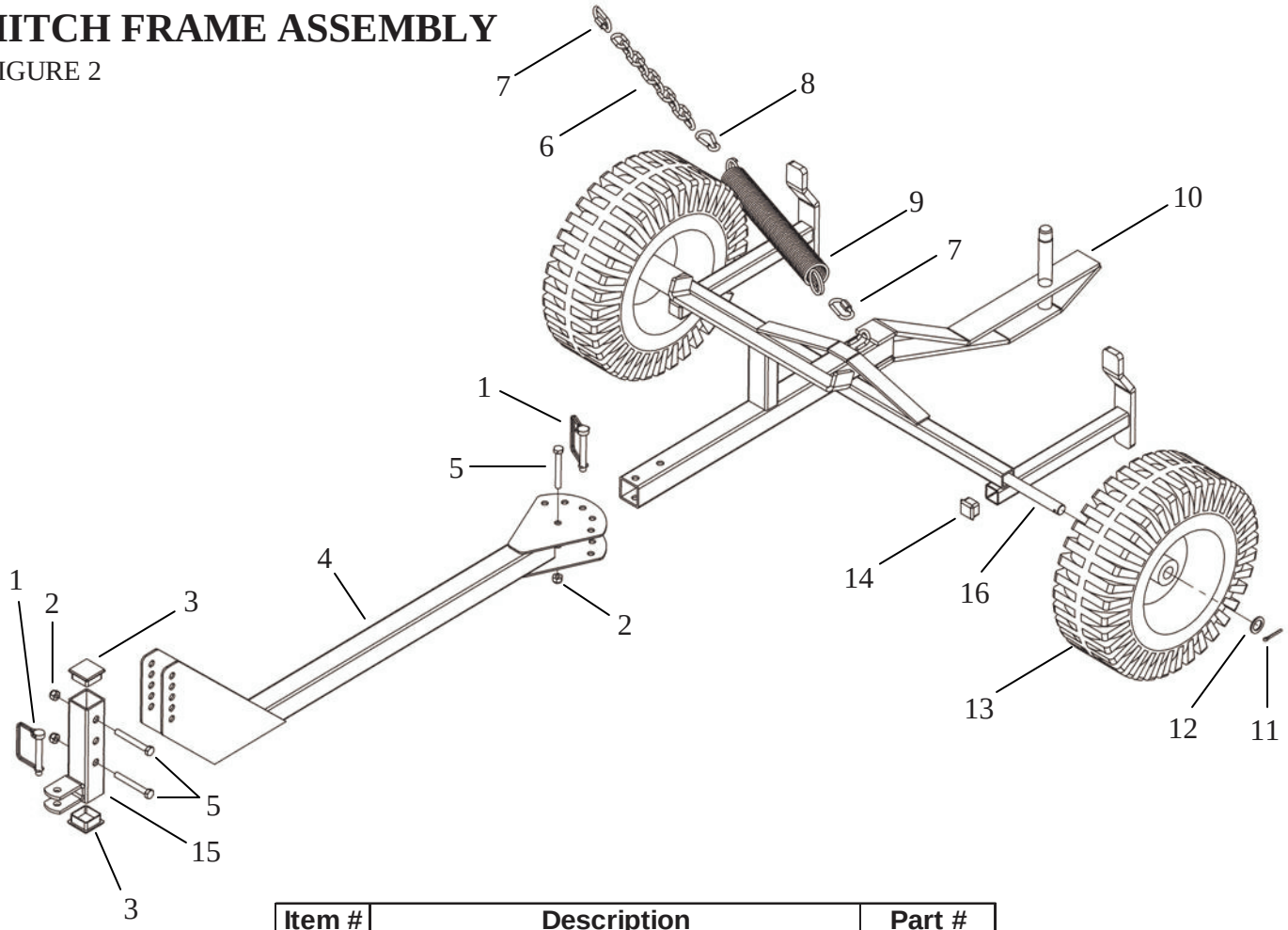

Item #	Description	Part #
1	Safety Hitch Pin	H11
2	5/16-18 Nyloc Nut	NB181
3	Plug for H1	10063
4	Hitch	3549TC
5	5/16-18 X 2 1/2 HCC GR5 ZP	NB138
6	Chain - Tension Adjustment	3568
7	3/16 Chain Connector	ES077
8	3/16 Spring Snap Hook	ES078
9	Spring	3508
10	Frame Weldment	3551TC
11	1/8 X 1 Cotter Pin	NB126
12	5/8 ID X 1 OD 14 GA Washer	NB149
13	Tire/Wheel- 5/8 Bearing 13x5x6 NHS	F4157WK
14	1" Square Plug	671P
15	L Hitch	H1TK
16	Axle	3536

ENGINE ASSEMBLY

FIGURE 3

NOT ACTUAL ENGINE USED (REF. ONLY)

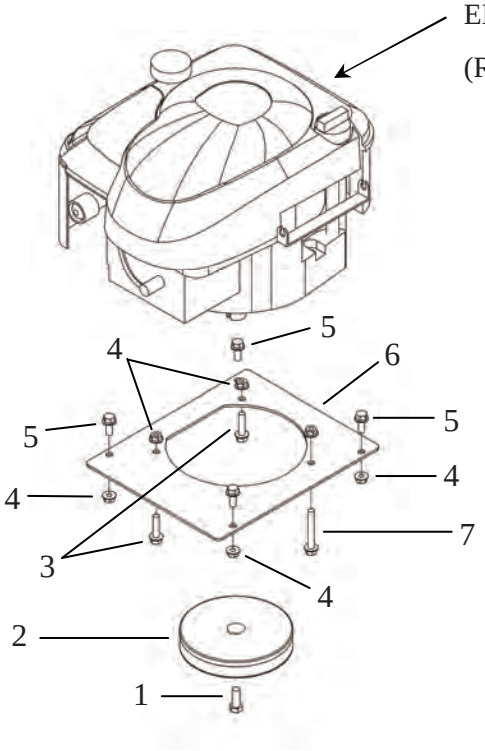

Item #	Description	Part #
1	3/8-24 X 1 Engine Bolt Locktite	NB238N
2	Pulley - Engine; Trimmer	2063
3	5/16-18 X 1 1/4 Serr. Flng Bolt	NB253
4	5/16-18 Serr. Flng Nut	NB170
5	5/16-18 X 3/4 Serr. Flng Bolt	NB596
6	Motor Base	3506TC
7	5/16-18 X 2 1/4 Flng Serr. GR5 ZP	NB622
	6.75 HP B&S Engine	N/A

BLADE DRIVER ASSEMBLY

FIGURE 4

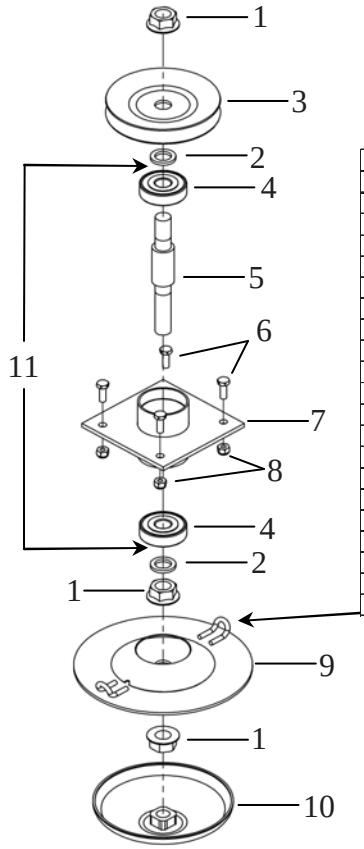

Item #	Description	Part #
1	5/8-11 Serr. Flng Nut	NB598
2	5/8 ID X 1 OD 10 GA Washer	NB178
3	Blade Pulley- 4.5"	2049
4	Trimmer Bearing	B985/8
5	Blade Shaft- Postmaster 7/8 X 5.875	3547
6	1/4-20 X 3/4 GR5 ZP	NB250
7	Short Bearing Housing	B99ECTK
8	1/4-20 Nylok Nut	NB180
9	Spinner Weldment Trimmer	2021TC
10	Spinner Bumper	3556TK
11	Spindle Sub-Assembly	3555
12	3/8-16 Nyloc Nut	NB182
13	3/8 Hardened Washer	NB196
14	Torsion Brake Spring	9040
15	Idler Arm PST	3533TK
16	1/2 X 1-9/16 Shoulder Bolt	NB220
17	3/8-16 X 1 3/4 Bolt	NB302
18	Idler Pulley OD-3.25", ID-3/8"	B527
19	3/8 SAE Washer	NB272
20	3/8-16 2-Way Lock Nut	NB280
Not Shown	36 Pack 18" Trimmer Line	P3618

IDLER ASSEMBLY

FIGURE 5

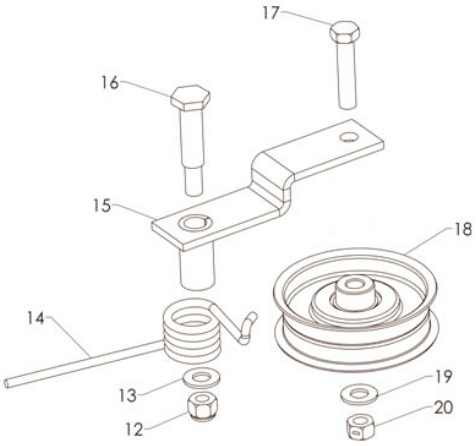

When ordering replacement parts

* = USE PAINT CODE:

TC=TEX.RED,S=SLIVER,TK=TEX.BLACK

swisherinc.com

OWNER'S MANUAL

MODEL NO.

PST67522
PST67522-CA
PST67522A
PST67522A-CA

POSTMASTER

Each mower has its own model number. Each engine has its own model number. The model number for the mower will be found on the right hand side of the drive belt housing. The model number for the engine will be found on the top of the blower fan housing.
All mower parts listed herein may be ordered directly from Swisher or your nearest Swisher dealer.
All engine parts may be ordered from the nearest dealer of the engine supplied with your mower.

WHEN ORDERING PARTS, PLEASE HAVE THE FOLLOWING INFORMATION AVAILABLE:

* PRODUCT - POSTMASTER
* SERIAL NUMBER - _____
* MODEL NUMBER - _____
* ENGINE MODEL NUMBER - _____
  TYPE - _____
* PART NUMBER
* PART DESCRIPTION

TELEPHONE - 1-800-222-8183
FAX - 1-660-747-8650

SWISHER
1602 CORPORATE DRIVE
WARRENSBURG, MO 64093
www.swisherinc.com

SWISHER

PRINTED IN U.S.A.