SWISHER
A TRADITION OF QUALITY SINCE 1945

OWNER'S MANUAL

STARTING SERIAL #:
99-307001

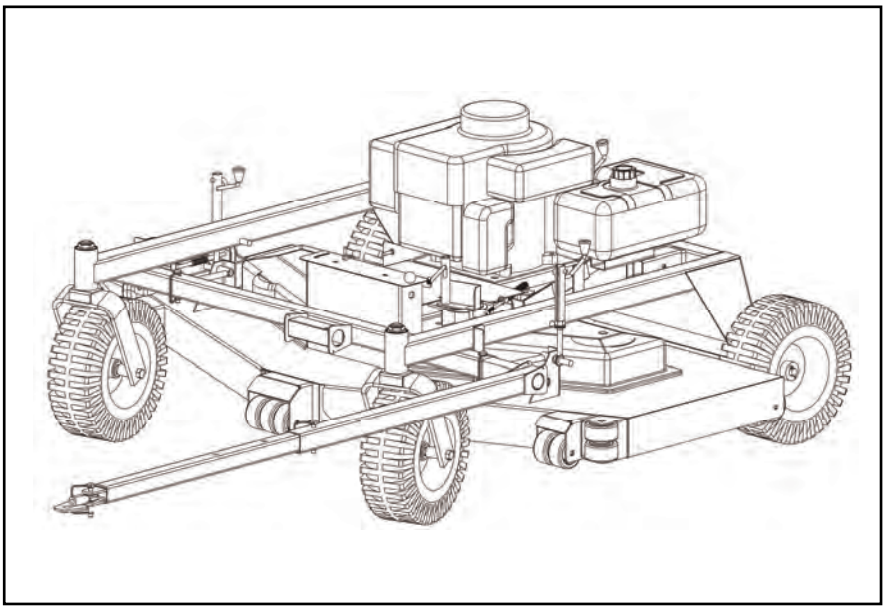

MODEL NO.
T1260
T1260F
T1360
T1460

60" UNIVERSAL TRAILMOWER

IMPORTANT

Read and follow all Safety Precautions and Instructions before operating this equipment.

Rev.04-288

Assembly
Operation
Service and Adjustment
Repair Parts

P.O. BOX 67, WARRENSBURG, MISSOURI 64093 PHONE 660-747-8183 FAX 660-747-8650

Manufacturing quality lawn care equipment since 1945

Made In The ***USA***

ONT60

LIMITED WARRANTY

The manufacturer's warranty to the original consumer purchaser is: This product is free from defects in materials and workmanship for a period of one (1) year from the date of purchase by the original consumer purchaser. We will repair or replace, at our discretion, parts found to be defective due to materials or workmanship. This warranty is subject to the following limitations and exclusions:

1) Engine Warranty	All engines utilized on our products have a separate warranty extended to them by the individual engine manufacturer. Any engine service difficulty is the responsibility of the engine manufacturer and in no way is Swisher Mower Co., Inc. or its agents responsible for the engine warranty. The Briggs & Stratton Engine Service Hot-Line is 1-800-233-3723. The Tecumseh Engine Service Hot-Line is 1-800-558-5402.
2) Commercial Use	The warranty period for this product used for commercial or rental is limited to ninety (90) days from the date of original purchase.
3) Limitations	This warranty applies only to products which have been properly assembled, adjusted, and operated in accordance with the instructions contained within this manual. This warranty does not apply to any product of Swisher Mower Co., Inc., that has been subject to alteration, misuse, abuse, improper assembly or installation, shipping damage, or to normal wear of the product.
4) Exclusions	Excluded from this warranty are normal wear, normal adjustments, and normal maintenance.

In the event you have a claim under this warranty, you must return the product to an authorized service dealer. All transportation charges, damage, or loss incurred during transportation of parts submitted for replacement or repair under this warranty shall be borne by the purchaser. Should you have any questions concerning this warranty, please contact us toll-free at 1-800-222-8183. The model number, serial number, date of purchase, and the name of the authorized Swisher dealer from whom you purchased the mower will be needed before any warranty claim can be processed.

SAFETY PRECAUTIONS

This Safety Alert Symbol indicates important messages in this manual. When you see this symbol, carefully read the message that follows and be alert to the possibility of personal injury.

Read this manual completely. This machine can amputate hands, feet, and throw objects. Failure to observe the following safety instructions could result in serious injury or death.

- Read the manual. Learn to operate this machine safely.
- Always disconnect the spark plug wire and place the wire where it cannot contact the spark plug, to prevent accidental starting the engine when setting up, transporting, adjusting or making repairs.
- Keep all shields and guards in place.
- Understand the speed, steering and stability of this machine. Know the positions and operations of all controls before you operate this machine. Check all of the controls in a safe area before starting to work with this machine.
- Allow only responsible adults who are familiar with these instructions to operate this machine. Never allow children to operate this machine.
- Clear the area of objects such as rocks, toys, wire, etc. that can be picked up and thrown by the blade.
- Be sure the area is clear of other people before mowing. Be aware of the mower discharge direction and do not point at anyone. Stop the machine if anyone enters the mowing area. Children are often attracted to the machine and the mowing activity. ***Never assume that children will remain where you last saw them.*** Keep children under the watchful care of another responsible adult.
- **No riders!**
- Do not put hands or feet near or under rotating parts. Keep clear of the discharge opening at all times.
- Do not mow in reverse. Always look down and behind before and while backing.

- Turn off the blades when not mowing. Before leaving the machine, turn off the blades and stop the engine.
- Watch for traffic when operating near or crossing roadways.
- Do not operate the mower if it has been dropped or damaged in any manner or if the mower vibrates excessively. Excessive vibration is an indication of damage. Repair mower as necessary.
- Dress properly. Do not operate the mower when barefoot or wearing open sandals. Wear only solid shoes with good traction when mowing.
- Do not operate the machine while under the influence of alcohol or drugs.
- Do not operate on slopes greater than 15 degrees.
- Never tamper with safety devices. Check their proper operation regularly.
- Stop and inspect the equipment if you strike an object. Repair, if necessary, before restarting.
- Never make adjustments or repairs with the engine running.
- Mower blades are sharp and can cut. Wrap the blades or wear gloves, and use extra caution when servicing them.

SAFETY DECALS

Replace decals immediately if damaged.Order by part number from Swisher Mowers

OD45- Warning Decal

OD43- Flying Debris Decal

OD55- Danger Decal

OD33- Speed Decal

OD11- No step Decal

OD29- Danger Decal

REQUIRED ASSEMBLY

FRONT WHEEL CASTER ASSEMBLY

1. Remove single nut and washers from caster shaft.
2. Place one washer on the shaft of the caster/wheel sub-assembly.
3. Slide same shaft through the bearing/frame with wheel towards the ground.
4. Place the other washer on the shaft; it should be resting on the top bearing.
5. Thread nyloc jam nut onto shaft.
6. Tighten nut snuggly, making sure shaft threads enter the nyloc of the nut. **Over-tightening of this nut will bind caster.**
7. Repeat process for other front side.

REAR WHEEL ASSEMBLY

1. Remove cotter pin from axle.
2. Slide washer [NB149] if necessary and wheel[valve stem out] onto axle and replace cotter pin.
3. Bend cotter pin so it will not fall out.
4. Repeat process for other wheel.

OFFSET & CENTER TOW HITCH BAR ASSEMBLY

1. Lay out parts according to the diagram.
2. Insert part 661A into part 662 and pin with the hitch pin (H11).
3. Insert part 661 into part 661A. Choose from the 3 holes to set the desired hitch length. Pin with a hitch pin.
4. Part 662 slides into the front tube of the frame. Again, choose from the 3 holes to arrange desired offset. Pin with a hitch pin (H11).
5. Eliminate step 3 for hitching from the center bracket. Only one method can be used at a time.

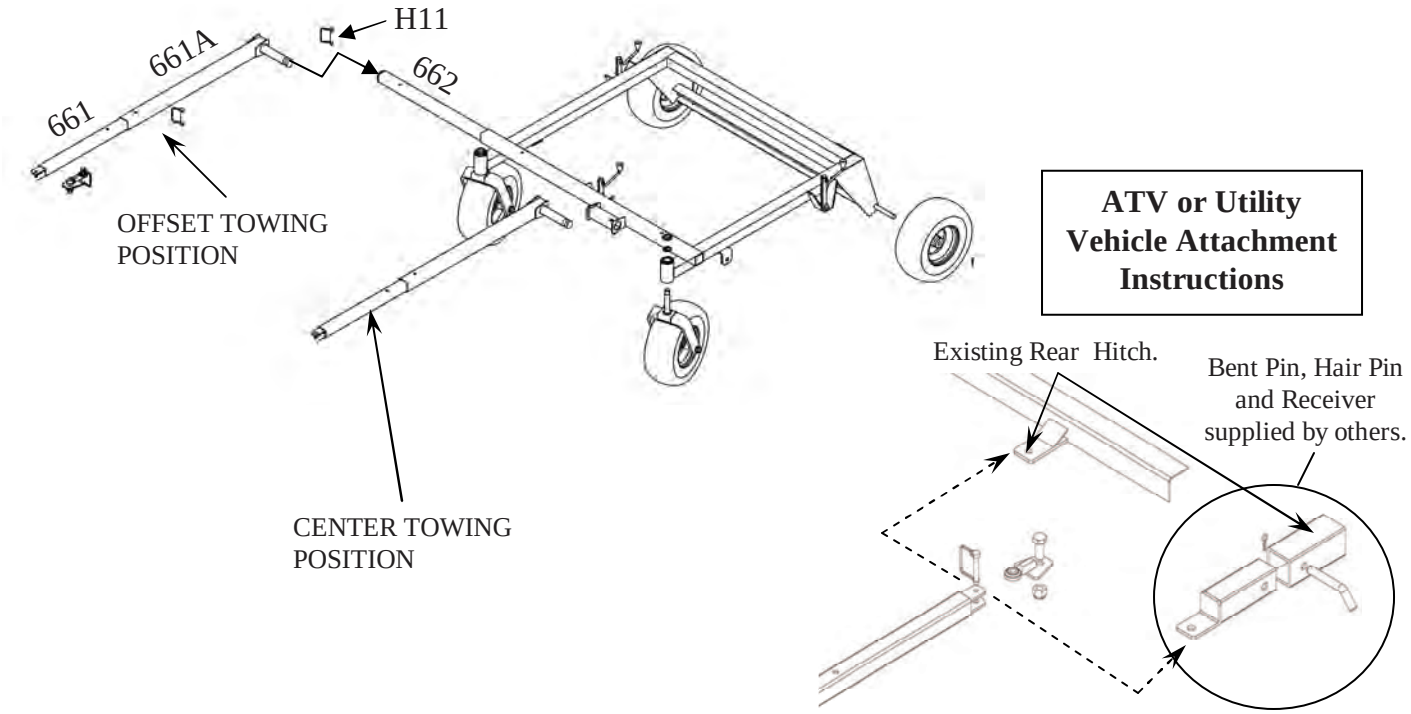

OPERATING YOUR TRAILMOWER

The operation of any mower can produce foreign objects to be thrown into the eyes, resulting in severe eye damage. Always wear certified safety glasses or wide-vision safety goggles over spectacles before staring any cutting machine and while operating such a machine.

The operation of any cutter produces sound waves that are damaging to the human ear. Ear protection is recommended.

CAUTION!
Tragic accidents can occur if the operator is not alert to the presence of children. Children are often attracted to the machine and the mowing activity. ***Never assume that children will remain where you last saw them.***

INTENDED USE
This TrailMower is designed to produce a quality finish cut on lawns, golf courses, etc. It is **not** designed to clear brush or cut saplings. Your TrailMower should be towed behind an ATV, a golf cart, lawn tractor, or similar approved vehicle. It is not meant for speeds exceeding 5 MPH.

ATTACHING TRAILMOWER TO TOW VEHICLE

- Place mower behind vehicle and back vehicle up to desired attaching position.
- When offsetting TrailMower do so to side opposite the discharge of the tow vehicle.
- Bolt swivel hitch (H10) to vehicle tow receiver.
- Attach tow hitch (661) to the swivel hitch with hitch pin (H11). Make certain hitch pin goes completely through each piece and is clipped to prevent accidental separation.
- Attach red safety tether (H9C) to both the towing vehicle and to the TrailMower toggle switch (685SP), located on the throttle housing (6155). Its purpose is to manually stop mower engine or to stop mower engine in case the two machines become separated.
- **It is extremely important the safety tether is secured properly to both the toggle switch and the towing vehicle.**

STARTING THE ENGINE
See engine manufacturer's instructions for the type and amount of oil and fuel used. TrailMowers with electric start engines will need a battery (sold separately). Swisher recommends using a standard "U 1 R" lawn & garden battery.

- Engine must be level to accurately check and fill oil. Do not overfill.

- Make sure the tow vehicle parking brake is set, mower is level, and blades are disengaged.
- Check spark plug wire, oil, and fuel.
- Check all electrical connections (See Schematics).
- Make sure toggle switch is turned “ON” and the red tether is properly attached.
- Set engine idle to “CHOKE” position.
- With feet clear of mower deck, turn key switch to the “START” position; [if unit is equipped with 12 volt system] release when engine begins to run.
- For units NOT equipped with electric start turn key to “ON” position and pull starter Rope until engine starts.
- Set engine idle at desired RPM.

BREAKING IN YOUR MOWER

- Set vehicle parking brake or chock wheels to prevent accidental rolling.
- Start engine properly.
- Slowly, engage blade control.
- In a safe environment, i.e. no children, allow blades to rotate and engine to idle for 5 minutes. This breaks in the belts and the engine.
- Stop mower properly.

CAUTION!
SHUT OFF MOWER ENGINE AND REMOVE SPARK PLUG WIRE FROM SPARK PLUG BEFORE MAKING ANY ADJUSTMENTS TO THE MOWER.

MOWER HEIGHT ADJUSTMENT

- Adjust while mower is **not** running.
- The cutting range is approximately 1.5” to 4.5”. The height has been measured from the ground to the blade tip without the engine running.
- Rotate height adjust crank handles (H7N) in a clockwise direction to lift the mower deck. A counter-clockwise direction is used to lower the mower deck.
- Make sure the height adjustment is the same at side crank handles. For best results, see “SUGGESTED PRACTICE” section. Graduated scales are for reference only, not the actual cutter height.
- Place crank handle in a retracted position to maintain height adjustment.

STARTING TO MOW

- Adjust the cutting height.
- Double check vehicle to mower attachment.
- Start mower engine properly.
- Slowly, activate the blade engage lever (681N) by rotating it forward and left until the lever locks into place.
- Carefully mount tow vehicle and start mowing slowly.

STOPPING THE MOWING SESSION

- Pull safety tether to shut toggle switch “OFF”. If the engine fails to stop or if the safety tether has become inoperable, then use Alternative Stopping Method.

ALTERNATIVE STOPPING METHOD

- Bring vehicle to complete stop, shut off engine, and set parking brake.
- Disengage blade engage lever (681N).
- Manually shut toggle and key switches to their “OFF” positions.
- Always remember to remove keys to avoid irresponsible usage.

TRANSPORTING MOWER

- Stop mower properly.
- Place mower deck in its highest position.
- If transporting unattached from tow vehicle, then remove spark plug wire and place where it cannot contact the spark plug.

SUGGESTED MOWING PRACTICES

- Operate mower engine at full throttle to assure the best cutting performance and maximum material discharge.
- Allow wet grass to dry. Clumps of wet grass will collect under the mowing deck.
- Mowing should be started with tow vehicle in low gear and increased only as safe mowing conditions permit. This speed should not exceed 5 MPH.
- The average lawn should be cut to approximately 2.5” during the cool season and to over 3” during the hot months.
- For a healthier lawn and better aesthetics, your lawn should be mowed often and after moderate growth.
- When cutting high or dense grass areas go slowly. Some areas may need to be mowed twice. The second cut should be at 90 degrees to the first, if possible.
- **Mowing thick or high grass.** Raise rear height crank handle to .5”-.75” above the other two handles.
- **Creating a manicured lawn.** Lower rear height crank handle to .25”-.5” below front of deck. This allows grass blades to be cut twice. It also continually cuts clippings to produce a mulching effect.

GENERAL TROUBLE SHOOTING

- The mower is not cutting level.
    - Level deck, making sure the side crank-handles are equal.
    - Check air pressure of all tires; make sure they are equal (about 15-18 psi).
    - Examine blades for damage, while mower engine is not running.
- The engine will not start.
    - Disengage blades, turn toggle switch to “ON” position, check battery and all other electrical connections, and inspect spark plug and wire.
    - Check for fuel in the engine.
- Engine runs poorly.
    - See engine manual.
    - Check throttle adjuster.
    - Replace fuel, clean fuel filter and fuel line.

IF PROBLEMS PERSIST HAVE A QUALIFIED MECHANIC SERVICE THE MOWER. NEVER ATTEMPT TO MAKE AN ADJUSTMENT THAT YOU ARE NOT SURE IS CORRECT. DOING SO CAN CAUSE OTHER PROBLEMS.

MOWER MAINTENANCE

GENERAL RECOMMENDATIONS

The warranty on this Trailmower does not cover items that have been subjected to operator abuse or negligence.
To receive full value from the warranty, operator must maintain unit as instructed in this manual.
Some adjustments will need to be made periodically to maintain your unit properly.
All adjustments in this manual should be checked at least once each season.

BEFORE EACH USE

- Check engine oil level on a level surface. (Check twice to insure an accurate reading.)
- Check condition of air filter; clean and replace as necessary.
- Check blade operation; keep blades in good condition.
- Check for loose fasteners and tighten them as needed.

AFTER EACH USE

- Keep blades sharp.
- Remove fresh grass clippings with garden hose.
- Grass clippings can harden to the underside should be scraped out with a putty knife.
- Keep fluids at proper levels.
- Cover unit to prevent rain or other debris build-up. Definitely cover the engine.

BEFORE AND/OR AFTER EACH SEASON

- Replace the spark plug.
- Clean or replace the air filter.
- A new spark plug and clean air filter assure proper air-fuel mixture and help your engine run better and last longer.
- Check blades and belts for wear. Replace as necessary.

STORAGE RECOMMENDATIONS

⚠ **CAUTION!** Do not store engine indoors or other poorly ventilated area. Keep engine away from gas appliances where fumes could contact open flame, pilot lights, or sparks.

⚠ **If engine is to be stored for 30 or more days, prepare unit as follows:**

- Drain fuel outside into an approved container.
- Start engine properly and run until unit is out of fuel.
- Let engine cool.
- Remove remaining gasoline from carburetor and fuel tank to prevent gum deposits from forming within the engine. Gum deposits can cause malfunction in the engine.
- Store mower with blades disengaged to prevent belts from being permanently stretched.

BLADE CARE AND SERVICE

For best results cutter blades must be kept sharp. The blades can be sharpened with a few strokes of a file or grinding wheel. Do not attempt to sharpen blades while they are on the cutter. ***Disconnect spark plug wire before servicing unit.***

Important: Replace blades that have been damaged or deeply nicked.

Important: Check blade and spindle hardware on a regular basis to make sure nuts are tight.

Only a qualified mechanic should be used for any adjustments, disassembly or other kind of repairs.

POL1260F Service Parts

Part Number	Description	Qty
0-D56	Throttle Decal	1
0-D57	Consol Decal	1
AS-066	Plastic Connector for Clutch	1
AS-067	Female Connector for Clutch	2
AS-068	In-Line Fuse Holder	1
AS-069	10 Amp Fuse	1
AS-071	1/2" Convoluted Tubing	12'
AS-072	End For Convoluted Tubing	1
AS-078	1" Black Velcro Hook	15"
AS-079	1" Black Velcro Loop	15"
E-BS12-9A	Briggs Engine 12hp 9amp Alt **NOT FOR SALE**	1
E-KOH1412V	Kohler Engine 14hp **NOT FOR SALE**	1
E-TEC12-7A	Tecumseh Engine 13hp 7amp **NOT FOR SALE**	1
NB513	5/16-18 X 4 Bolt (Rear Caster Lock)	2
6114	Blade Pulley NT60	4
642	Engine Belt	1
644	After Sn 98286002 Engine Belt	1
665R	Rear Caster Arm	2
685	Toggle Switch	1
686C	Plastic Console	1
686CB	Console Assembly, Briggs	1
686CK	Console Assembly, Kohler	1
686CT	Console Assembly, Tecumseh	1
686FM	Throttle Assembly	1
688EC	Electric Clutch	1
7033	Velcro Tie Downs	4
B19	Throttle Knob	1
B4104	Blade Pulley T-40, Used on Top Center of Blade Driver	1

These are in addition to the standard T60 parts. The deck and Frame are slightly different.

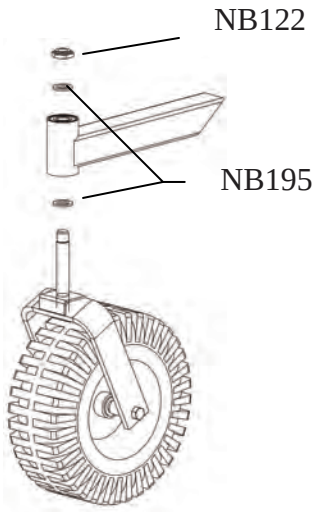

Figure 01

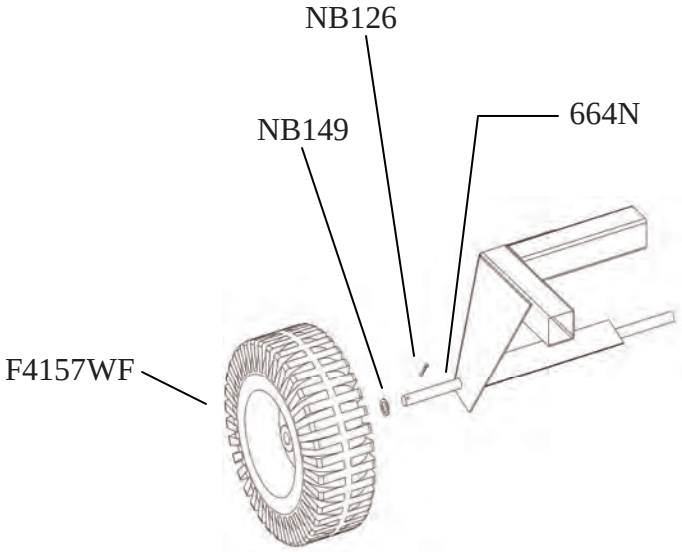

Figure 02

Figure 03

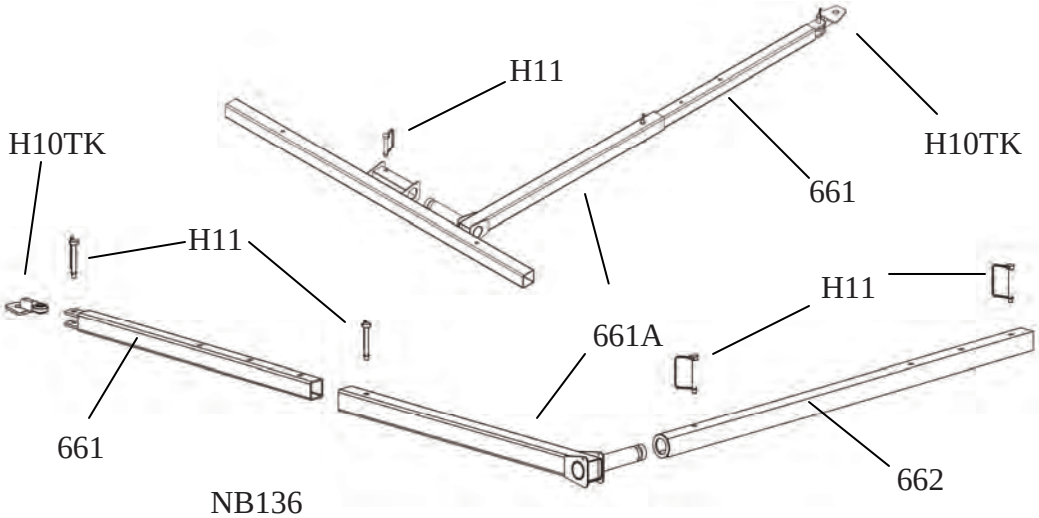

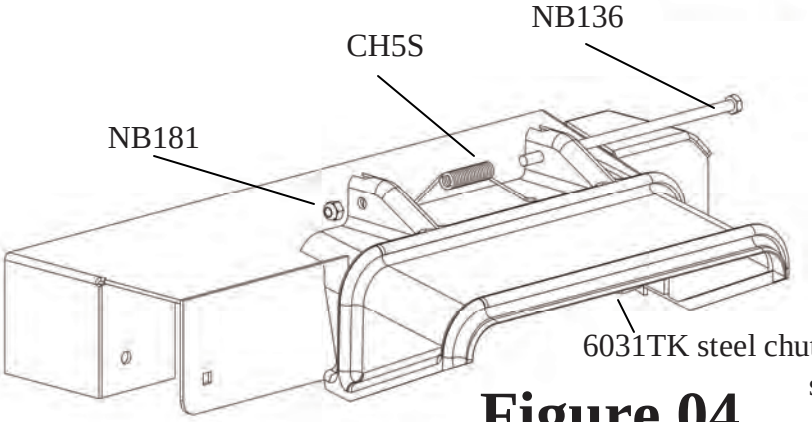

Figure 04

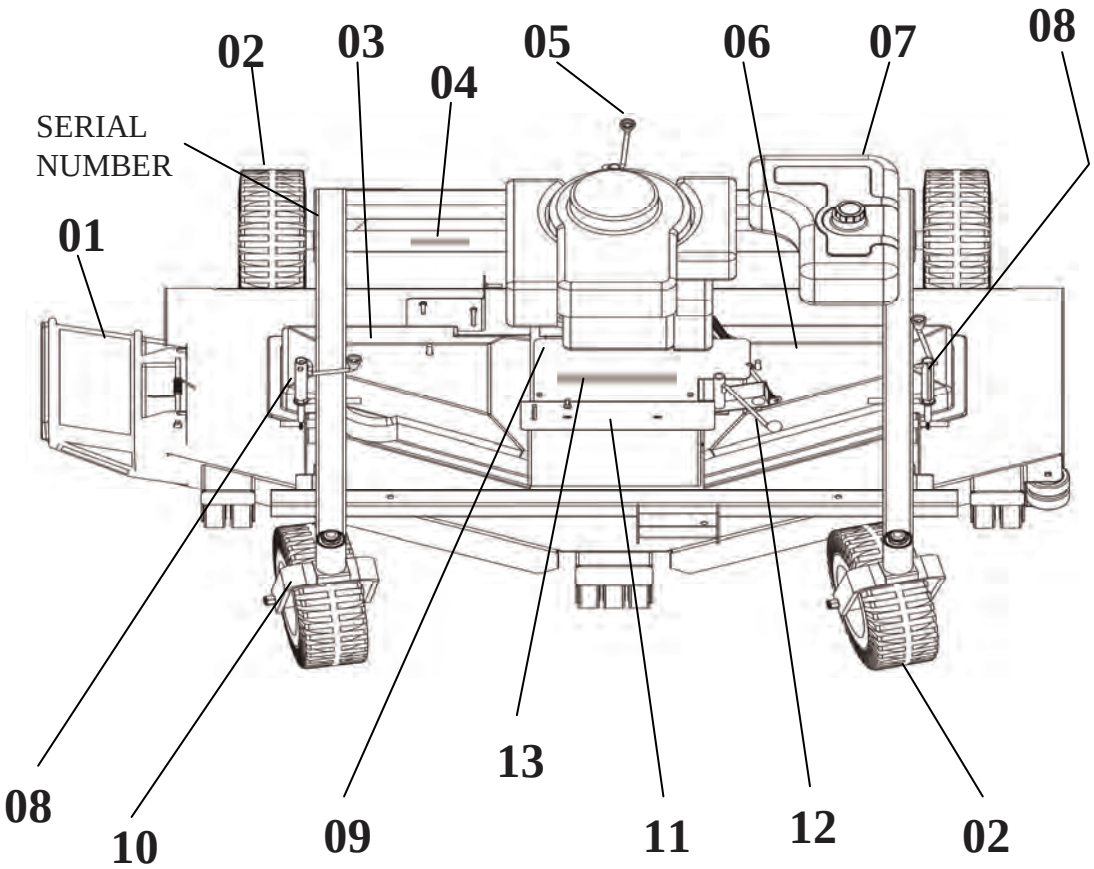

Figure 05

Item #	Description	Part #	Item #	Description	Part #
1	Grass Chute	6031TK	8	Height Adjust Assembly	H7N
	Bolt/Nut	NB136/NB181		Eye Bolt	10038
	Spring	CH5S		Stabilizer Arm	6696
2	Tire/Wheel/Bearing	F4157W		Plastic Bushing	T2PB
3	Right Belt Guard	6155RN		Ruler Decal	OD41
	Acorn Nut	NB120		Knob	H7K
4	No Step Decal	OD11		5/16 Pal Nut	NB276
5	Height Adjust Assembly	H7N	9	Engine Plate	6155NFC
	Plastic Bushing	T2PB	10	Front Caster Assembly	6774C
	Ruler Decal	OD41		Tire/Wheel/Bearing	F4157W
	Eye Bolt	10038		Bolt/Nut	NB624/NB595
	Knob	H7K		Spacer (Exterior)	663L
	5/16 Pal Nut	NB276		Washer	NB178
6	Left Belt Guard	6155LN		Caster Fork	665C
	Acorn Nut	NB120		Caster Nut	NB122
7	Gas Tank	6102T		Washer	NB195
	Gas Cap	6102NC	11	Throttle Plate	6155THC
	Gas Tank Mount	6102NTK	12	Engage Lever	6720C
	Rubber Bushing	AS119	13	Swisher Decal	OD99116
	Fuel Shutoff Valve	AS120			
	Fuel Line Hose Clamp	6FLC			
	Fuel Line	AS140			

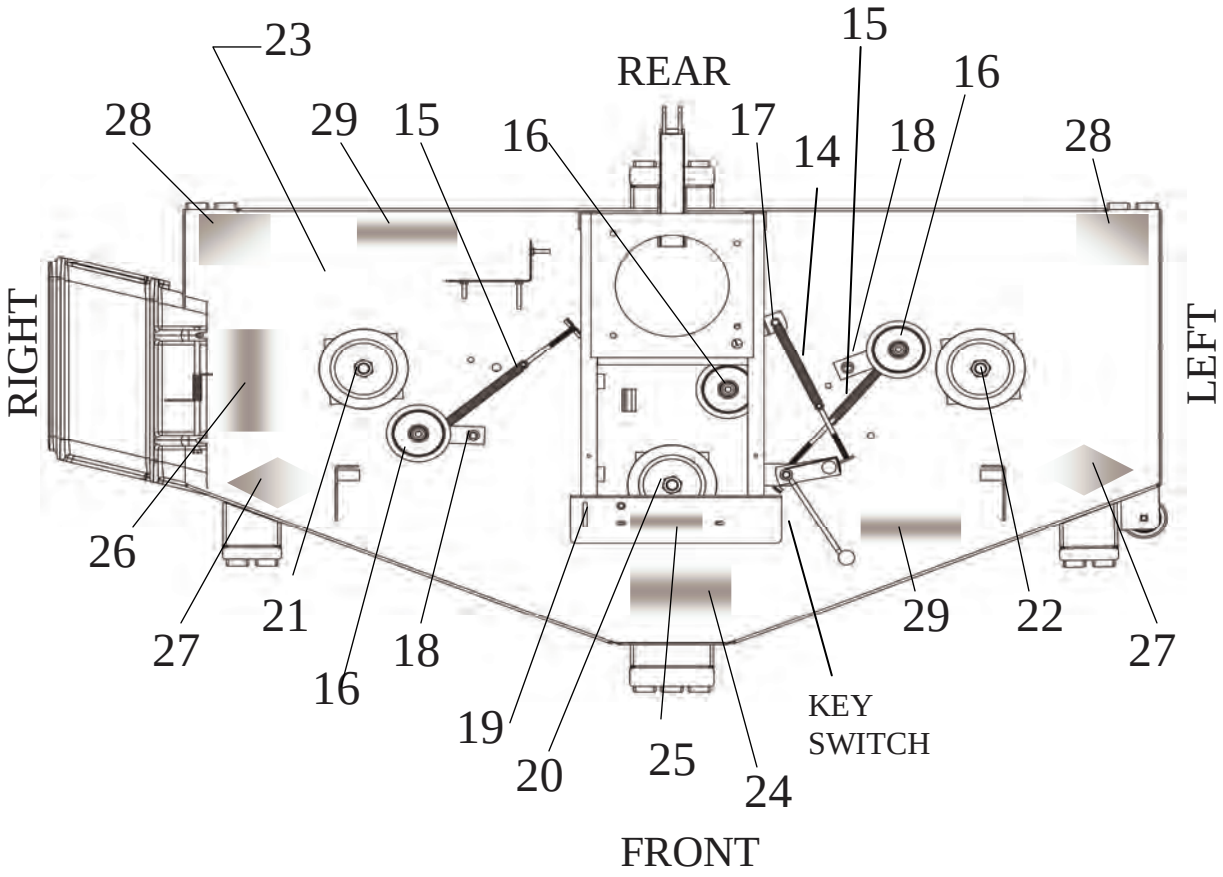

Figure 06

Item #	Description	Part #	Item #	Description	Part #
14	Clutch Idler Rod/Spring	3123TK/682S	22	Blade Driver Left	9086
15	Idler Rod/Spring	6704TK/682S	23	Deck	6725TC
16	Idler Pulley	B527	24	Warning Serious Injury Decal	OD45
17	Clutch Idler Arm	6709TK	25	5 MPH Decal	OD33
18	Idler Bracket	6681TK	26	Caution - Deflector Decal	OD43
19	Throttle Decal	OD58TX	27	60" Decal	OD99128
20	Blade Driver Center	9084	28	Danger Triangle Decal	OD55
21	Blade Driver Right	9085	29	Danger Decal	OD29

Blade Driver Update		
Position	**Part #**	**Replaces**
Center	9084 Blade Driver Assembly	6769 Blade Driver Assembly and 9002 Shaft
Right	9085 Blade Driver Assembly	9059 Blade Driver Assembly and 9000 Shaft
Left	9086 Blade Driver Assembly	9059 Blade Driver Assembly and 9001 Shaft

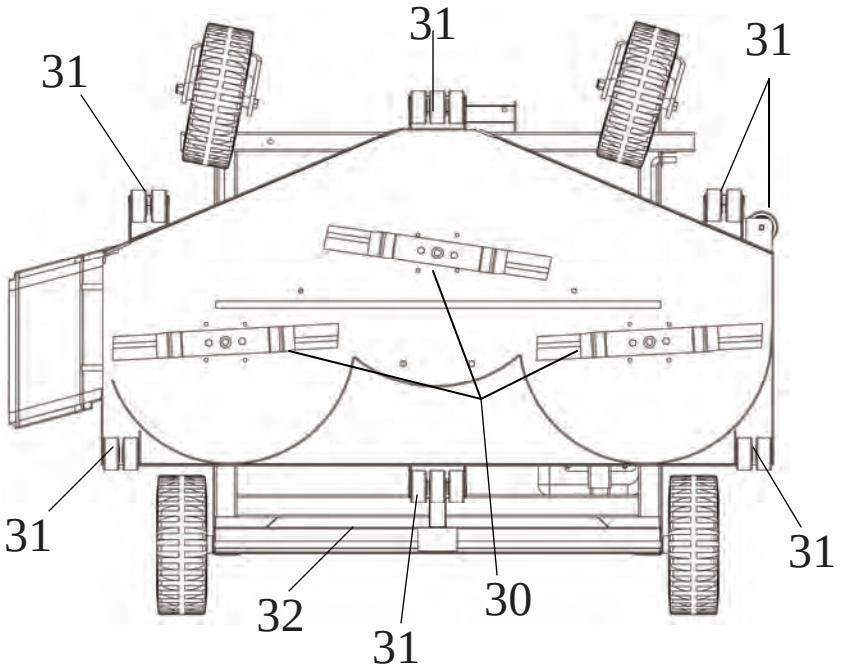

Figure 07

Item #	Description	Part #
30	Blade (3)	9004
31	Anti-Scalp Roller	AS001
32	Rear Axle	664N

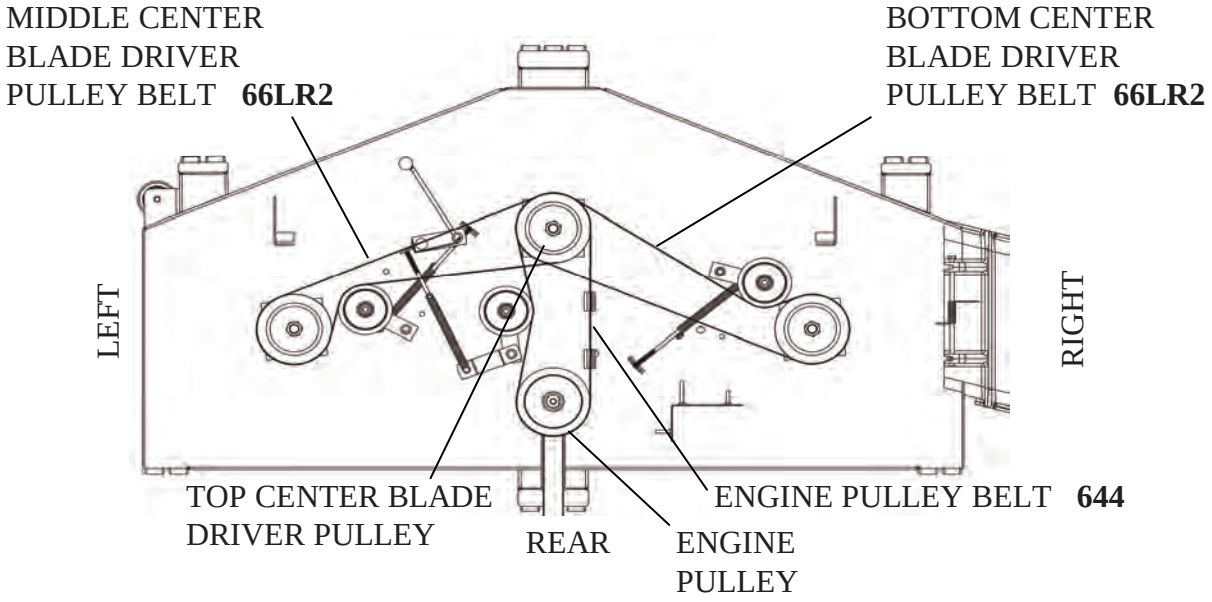

BELT CONFIGURATION

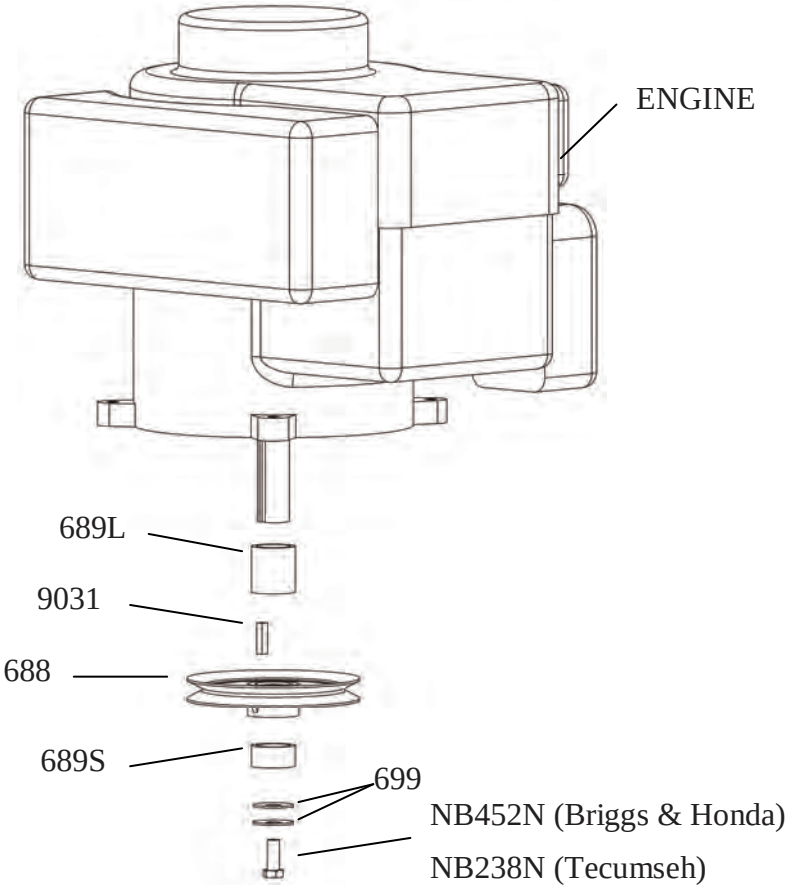

Not Shown OIL DRAIN VALVE + CAP	AS122, AS123

ENGINE PULLEY ASSEMBLY

BLADE DRIVER ASSEMBLIES

EFFECTIVE AFTER SERIAL# L199307001

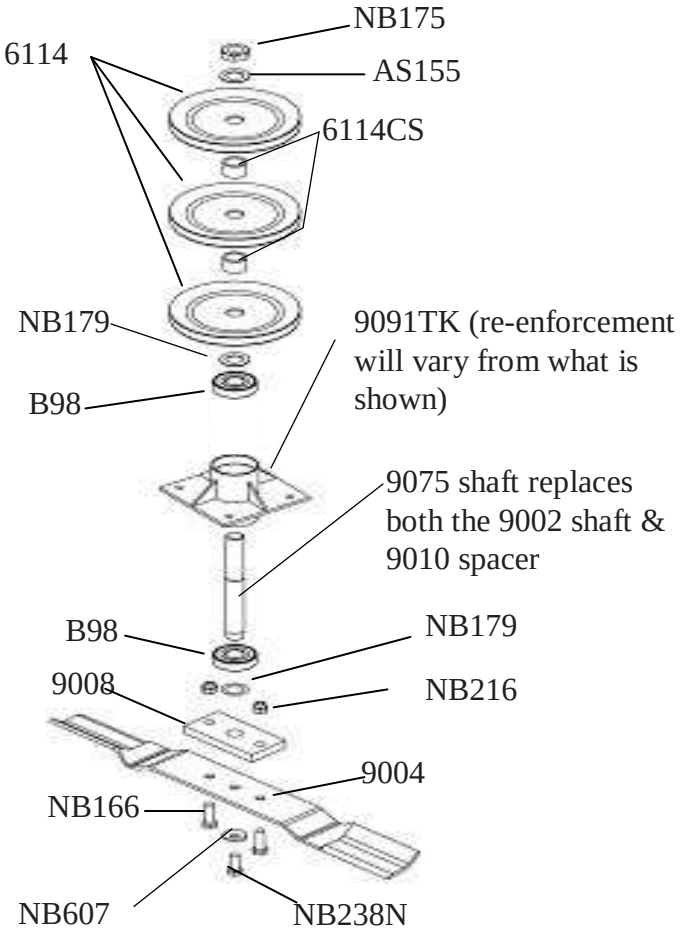

9084

"CENTER"

9085 "RIGHT"

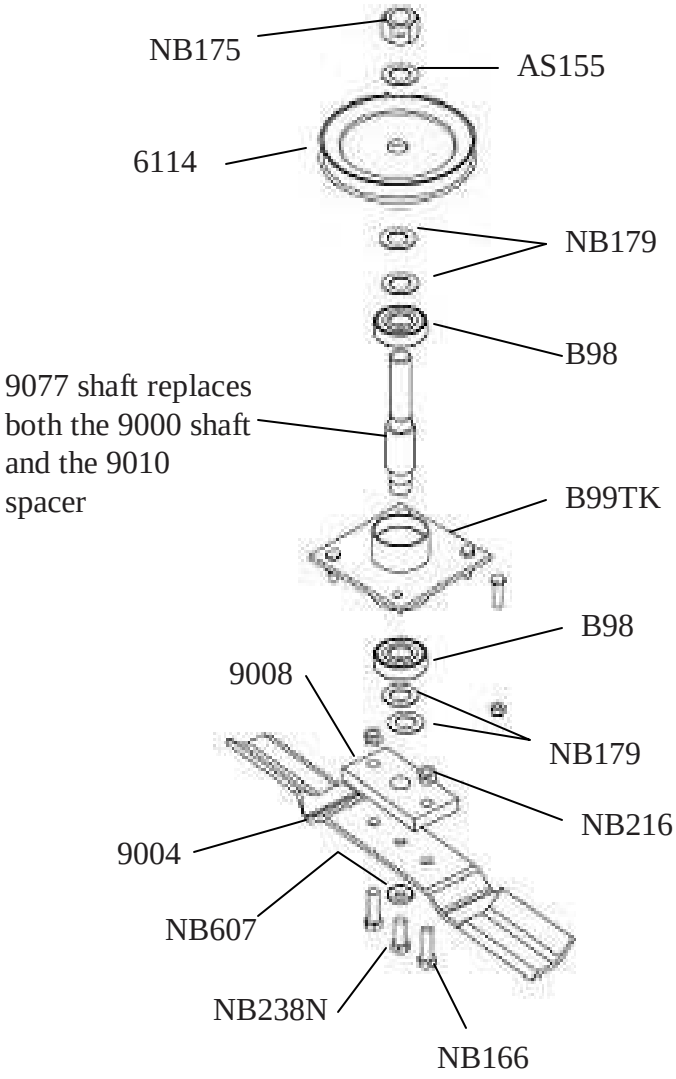

9086

“LEFT”

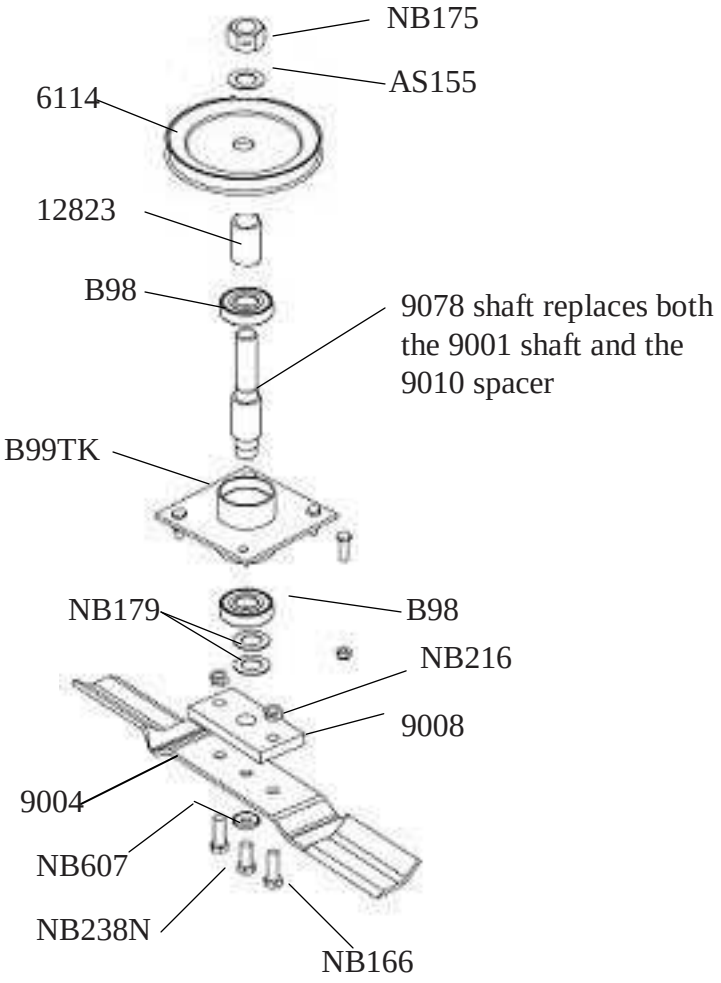
NB175
AS155
6114
12823
B98
9078 shaft replaces both the 9001 shaft and the 9010 spacer
B99TK
NB179
B98
NB216
9008
9004
NB607
NB238N
NB166

ELECTRIC START WIRING SCHEMATIC

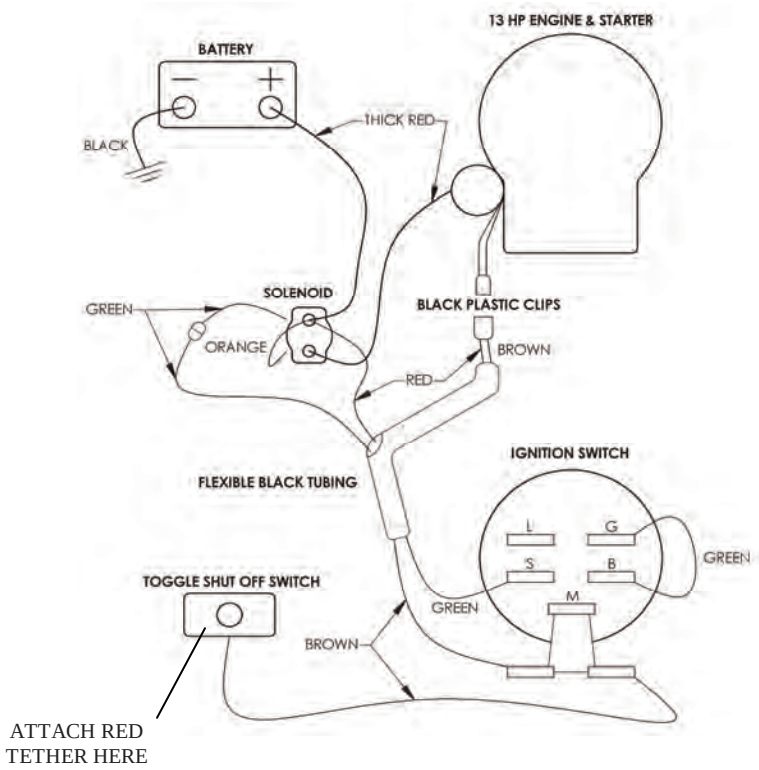

HONDA WIRING SCHEMATIC

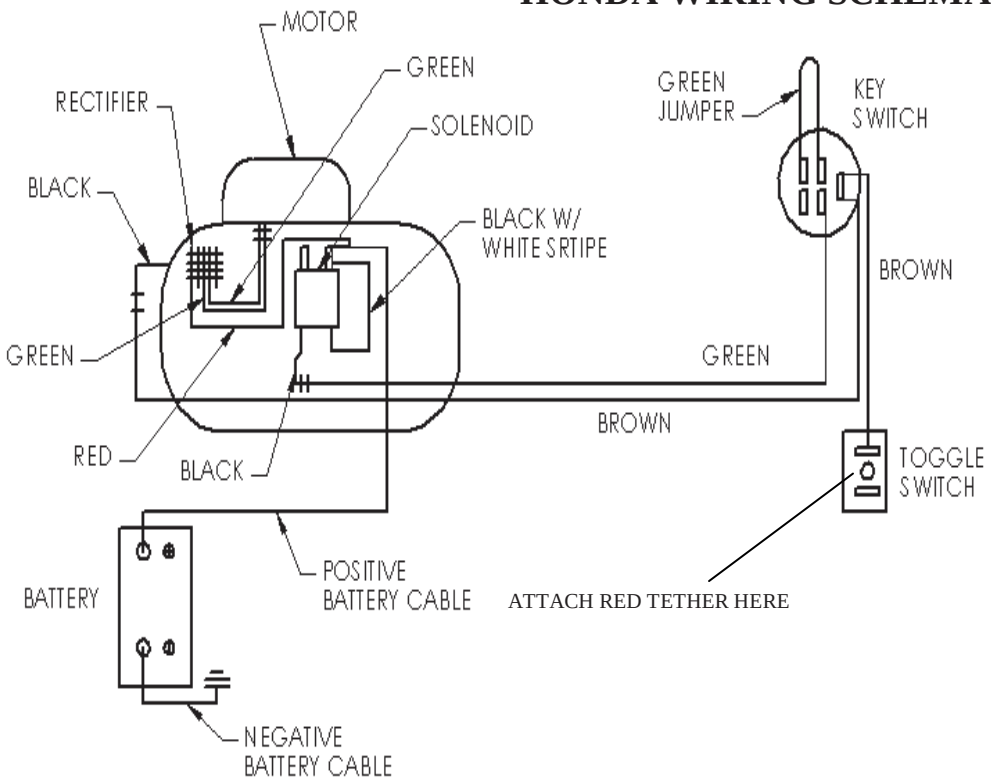

Items Not Shown	
Item	Part #
Wiring Harness (Briggs)	WHN60B
Wiring Harness (Tecumseh)	WHN60T
Wiring Harness (Honda)	WHN60H
Solenoid	16915
Frame Caster Bearings	B98
Key Switch	KS12
Battery Cable - Red	BCSR
Battery Cable - Black	BCS
Engine Belt	644
Blade Driver Belts	66LR2
Throttle Cable	686N

NOTES

OWNER'S MANUAL

MODEL NO.
T1260
T1260F
T1360
T1460

60" UNIVERSAL TRAILMOWER

HOW TO ORDER REPAIR PARTS:

Each mower has its own model number. Each engine has its own model number. The model number for the mower will be found on the right hand side of the frame above the right rear wheel. The model number for the engine will be found on the top of the blower fan housing.
All mower parts listed herein may be ordered directly from Swisher Mower & Machine Co. Inc. or your nearest Swisher dealer.
All engine parts may be ordered from the nearest dealer of the engine supplied with your mower.

WHEN ORDERING PARTS, PLEASE HAVE THE FOLLOWING INORMATION AVAILABLE:

* PRODUCT – T-60 TRAILMOWER
* SERIAL NUMBER - _____
* MODEL NUMBER - _____
* ENGINE MODEL NUMBER - _____
  TYPE - _____
* PART NUMBER
* PART DESCRIPTION

TELEPHONE - 1-800-222-8183
FAX - 1-660-747-8650

SWISHER MOWER & MACHINE CO. INC.
P.O. BOX 67
WARRENSBURG, MO 64093

SWISHER MOWER & MACHINE CO. INC.

PRINTED IN U.S.A.