swisherinc.com

OWNER'S MANUAL

MODEL NO.

WB80024
WB80024S
WB8524

Read and follow all Safety Rules and Instructions before operating this equipment.

Rev. 02.14.02

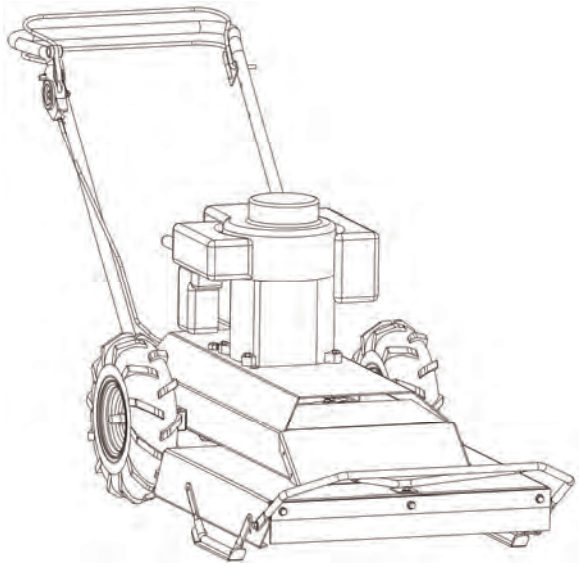

THE PREDATOR

24" ROUGH CUT WALK BEHIND CUTTER

Assembly
Operation
Service and Adjustment
Repair Parts

1602 CORPORATE DRIVE, P.O. BOX 67, WARRENSBURG, MISSOURI 64093
PHONE (660) 747-8183 FAX (660) 747-8650

Manufacturing quality lawn care equipment since 1945

Made In The ***USA***

ONWB824

LIMITED WARRANTY

The manufacturer's warranty to the original consumer purchaser is: This product is free from defects in materials and workmanship for a period of one (1) year from the date of purchase by the original consumer purchaser. We will repair or replace, at our discretion, parts found to be defective due to materials or workmanship. This warranty is subject to the following limitations and exclusions:

1) Engine Warranty	All engines utilized on our products have a separate warranty extended to them by the individual engine manufacturer. Any engine service difficulty is the responsibility of the engine manufacturer and in no way is Swisher Mower Co., Inc. or its agents responsible for the engine warranty. The Briggs & Stratton Engine Service Hot-Line is 1-800-233-3723. The Tecumseh Engine Service Hot-Line is 1-800-558-5402.
2) Commercial Use	The warranty period for any product used for commercial or rental is limited to ninety (90) days from the date of original purchase.
3) Limitations	This warranty applies only to products which have been properly assembled, adjusted, and operated in accordance with the instructions contained within this manual. This warranty does not apply to any product of Swisher Mower Co., Inc., that has been subject to alteration, misuse, abuse, improper assembly or installation, shipping damage, or to normal wear of the product.
4) Exclusions	Excluded from this warranty are normal wear, normal adjustments, and normal maintenance.

In the event you have a claim under this warranty, you must return the product to an authorized service dealer. All transportation charges, damage, or loss incurred during transportation of parts submitted for replacement or repair under this warranty shall be borne by the purchaser. Should you have any questions concerning this warranty, please contact us toll-free at 1-800-222-8183. The model number, serial number, date of purchase, and the name of the authorized Swisher dealer from whom you purchased the mower will be needed before any warranty claim can be processed.

THIS WARRANTY DOES NOT APPLY TO ANY INCIDENTAL OR CONSEQUENTIAL DAMAGES AND ANY IMPLIED WARRANTIES ARE LIMITED TO THE SAME TIME PERIODS STATED HEREIN FOR ALL EXPRESSED WARRANTIES. Some states do not allow the limitation of consequential damages or limitations on how long an implied warranty may last, so the above limitations or exclusions may not apply to you. This warranty gives you specific legal rights and you may have other rights, which vary from state-to-state. This is a limited warranty as defined by the Magnuson-Moss Act of 1975.

SAFETY PRECAUTIONS AND DECALS

This Safety Alert Symbol indicates important messages in this manual. When you see this symbol, carefully read the message that follows and be alert to the possibility of personal injury.

Read this manual completely. This machine is capable of amputating hands and feet, and throwing objects. Failure to observe the following safety instructions could result in serious injury or death.

- Read the manual. Learn to operate this machine safely.
- Always disconnect the spark plug wire and place the wire where it cannot contact the spark plug, to prevent accidentally starting the engine when setting up, transporting, adjusting or making repairs.
- Keep all shields and guards in place.
- Understand the speed, steering and stability of this machine. Know the positions and operations of all controls before you operate this machine. Check all of the controls in a safe area before starting to work with this machine.
- Allow only responsible adults who are familiar with these instructions to operate this machine. Never allow children to operate this machine.
- Clear the area of objects such as rocks, toys, wire, etc. that can be picked up and thrown by the blade.
- Be sure the area is clear of other people before mowing. Be aware of the mower discharge direction and do not point at anyone. Stop the machine if anyone enters the mowing area. Children are often attracted to the machine and the mowing activity. ***Never assume that children will remain where you last saw them.*** Keep children under the watchful care of another responsible adult.
- **No riders!**
- Do not put hands or feet near or under rotating parts. Keep clear of the discharge opening at all times.
- Do not mow in reverse. Always look down and behind before and while backing.

- Turn off the blades when not mowing. Before leaving the machine, turn off the blades and stop the engine.

- Watch for traffic when operating near or crossing roadways.

- Do not operate the mower if it has been dropped or damaged in any manner or if the mower vibrates excessively. Excessive vibration is an indication of damage. Repair mower as necessary.

- Dress properly. Do not operate the mower when barefoot or wearing open sandals. Wear only solid shoes with good traction when mowing.

- Do not operate the machine while under the influence of alcohol or drugs.

- Operate self-propelled machines up and down slopes. There is significant risk of overturns when operating across slopes. Operate walk-behind machines across slopes. There is a significant risk of slipping under a walk-behind machine when operating up and down slopes.

- Never tamper with safety devices. Check their proper operation regularly.

- Stop and inspect the equipment if you strike an object. Repair, if necessary, before restarting.

- Never make adjustments or repairs with the engine running.

- Mower blades are sharp and can cut. Wrap the blades or wear gloves, and use extra caution when servicing them.

SAFETY FIRST

SWISHER

A TRADITION OF QUALITY SINCE 1945

QUALITY ALWAYS

SAFETY PRECAUTIONS AND DECALS

Replace decal immediately if damaged. Order by part number from Swisher Mower and Machine Co. Inc.

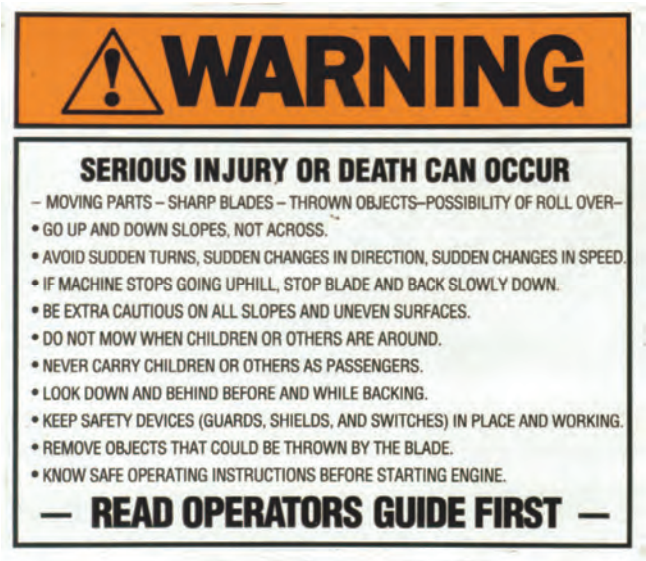

OD45 – WARNING DECAL

D55 – DANGER DECAL

D29 – SPINNING BLADE DECAL

OPERATING YOUR NEW CUTTER

The operation of any cutter can produce foreign objects to be thrown into the eyes, resulting in severe eye damage. Always wear certified safety glasses or wide-vision safety goggles before starting any cutting machine and while operating such a machine.

The operation of any cutter produces sound waves that are damaging to the human ear. Ear protection is recommended.

CAUTION!
Tragic accidents can occur if the operator is not alert to the presence of children. Children are often attracted to the machine and the mowing activity. ***Never assume that children will remain where you last saw them.***

INTENDED USE
This is not a lawn mower. The Predator is designed for cutting overgrown brush, weeds, and other types of organic growth. This unit is capable of clearing small saplings of 1-1/2" in diameter or less.

PROPULSION
The Predator is self-propelled, and is controlled by a "GROUND CONTROL" bail. To engage the drive, put the transaxle in a gear and activate the lower bail. Releasing the bail will disengage the self-propel.

Under most conditions cutting should be done in a low gear (1st or 2nd). Upper gears should be used for conditions where weeds and brush are thinned out or not as tall. In confined areas the machine can be pushed forwards or backwards by releasing the "GROUND CONTROL" bail, placing the transaxle in neutral, and pushing the machine.

TRAVEL SPEED can be varied by choosing a higher or lower gear using the gearshift lever at the rear of the machine or by changing the engine speed with the engine throttle. Do not adjust speed with blades engaged. To shift the cutter into reverse, release "GROUND CONTROL" bail, disengage blade, and rotate the shift lever to the left. When the lever stops lift up and continue to turn it to the left until it stops again. **Blade will not engage while cutter is in the "reverse" gear.**

BLADE ENGAGE
An “OPERATOR PRESENCE” bail and a “BLADE ENGAGE” lever control engaging the Predator’s blade. Both devices must be activated before the blade will work. Releasing the “OPERATOR PRESENCE” bail will disengage both the blade and the “BLADE ENGAGE” lever.

STARTING THE ENGINE

- See engine manufacturer’s instructions for the type and amount of oil and fuel used. Engine must be level to accurately check and fill oil.
- Make sure unit is level, blades disengaged, and transaxle in “NEUTRAL”.
- Check spark plug wire, oil, and fuel.
- Turn key switch to the “ON” position.
- Set engine idle to the “CHOKE” position.
- With feet clear of cutter deck, pull engine coil rope. Do not pull rope recklessly.
- Set engine speed by moving “CHOKE” to the desired RPM.

STOPPING

- Bring cutter to a complete stop.
- Disengage the blade.
- Place transaxle in the “NEUTRAL” position.
- Turn key to “OFF” position.
- Remove keys to avoid irresponsible usage.

CUTTER HEIGHT ADJUSTMENT

- There are two height settings.
- Place two 6” wooden blocks under the deck on the side being adjusted.
- Remove nuts and bolts from the side runner.
- Slide runner to the other position.
- Replace the nuts and bolts making certain they are secure.
- Repeat to other side. Runners should be at the same height.

BREAKING IN YOUR CUTTER

- Start engine properly.
- Slowly, engage blade control.
- Under supervision, allow blades to rotate and engine to idle for 5 minutes.
- Disengage blades.
- Shift through each gear. While in each gear engage the “GROUND CONTROL” and travel 20 yards to ensure transaxle works properly.

CAUTION!
Disconnect spark plug wire and place the wire where it cannot connect the spark plug before servicing unit.

BEGIN CUTTING

- Make sure area is clear of all bystanders.
- Make sure that all guards, belt guides, and the spark plug wire are properly attached.
- Start engine, setting desired engine speed.
- Slowly, engage blade.
- Move transaxle into low gear and activate “GROUND CONTROL” bail.
- Turning is done by rotating the handles left or right. This machine has significant weight and may take more effort to turn than one may expect. Turning could take practice.

CAUTION!
Chock wheels when parking on a hillside.

BACKING UP

- Disengage blade.
- Check safety behind you.
- Move transaxle into “REVERSE” position.
- Activate “GROUND CONTROL” bail.

TRANSPORTING

- Disengage blade.
- Shut off engine and remove keys.
- Using 3 persons to lift cutter is recommended.
- Secure in place while unit is being transported.
- Unit should be left in low gear to avoid any slight rolling.

SUGGESTED PRACTICES

- Always operate engine at full throttle when cutting to assure the best cutting performance and proper discharge of material.
- If grass is wet, allow it to dry out. Wet grass clumps will collect on the bottom of the deck.
- Go Slow when cutting dense areas. Some dense areas may need to be gone over twice. Better results occur if the second cut is 90 degrees to the first cut.

OVERALL ASSEMBLY

Some parts are grouped together in the REPLACEMENT PARTS list (i.e. nuts, bolts, washers, etc.)

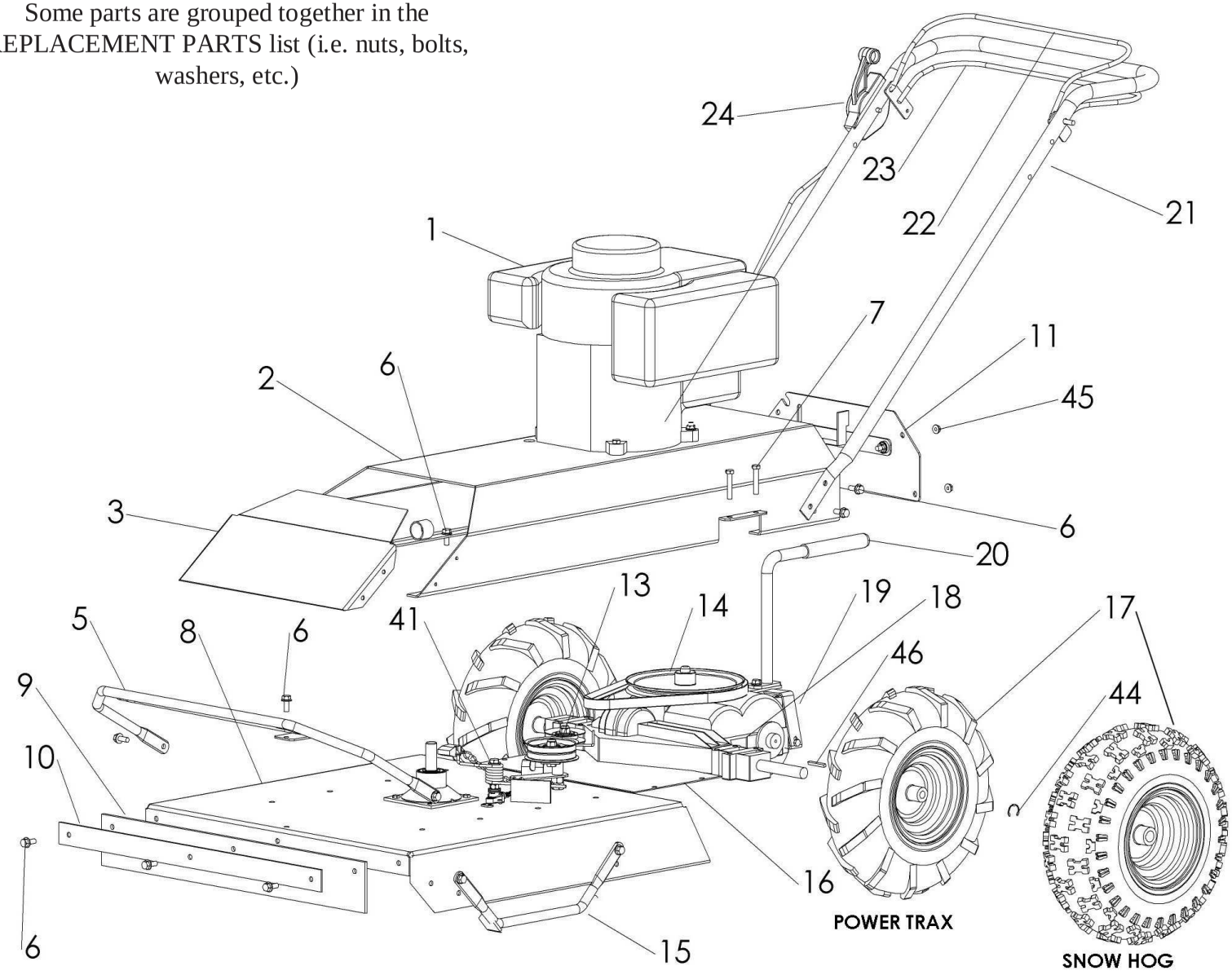

BLADE IDLER & BRAKE CONFIGURATION

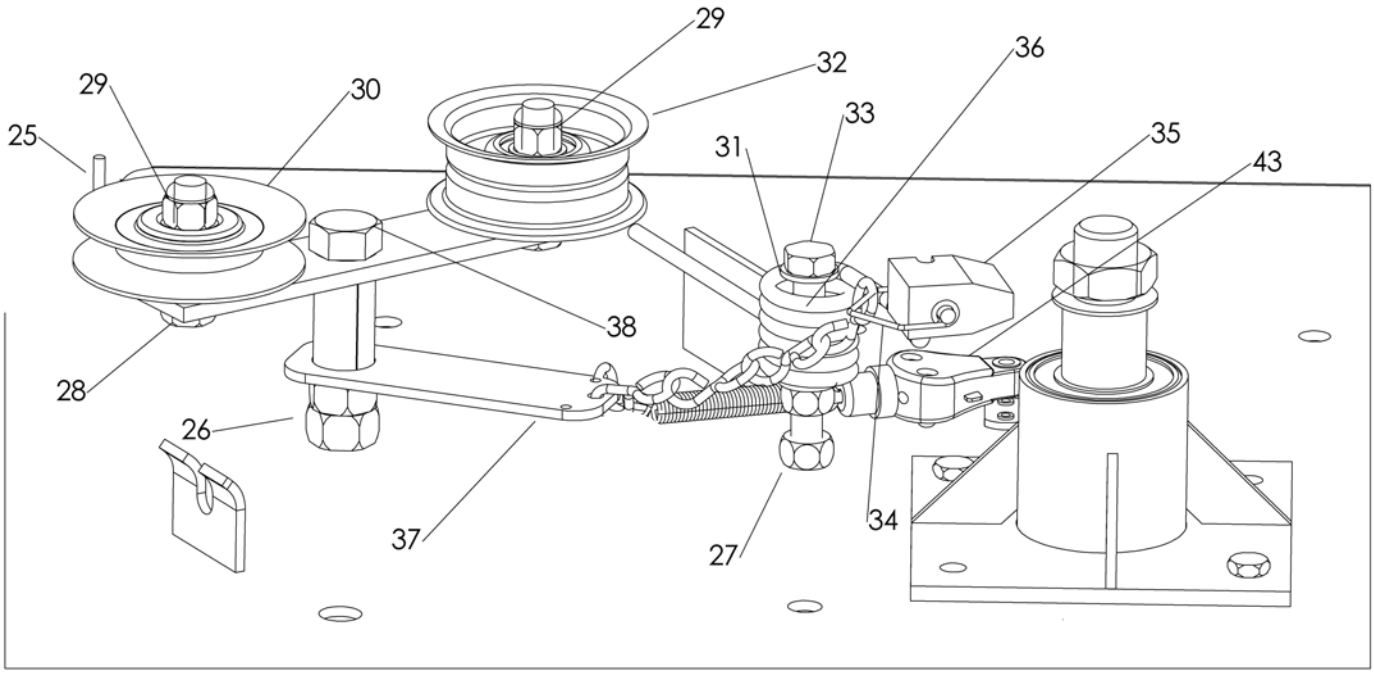

TRANSMISSION IDLER CONFIGURATION

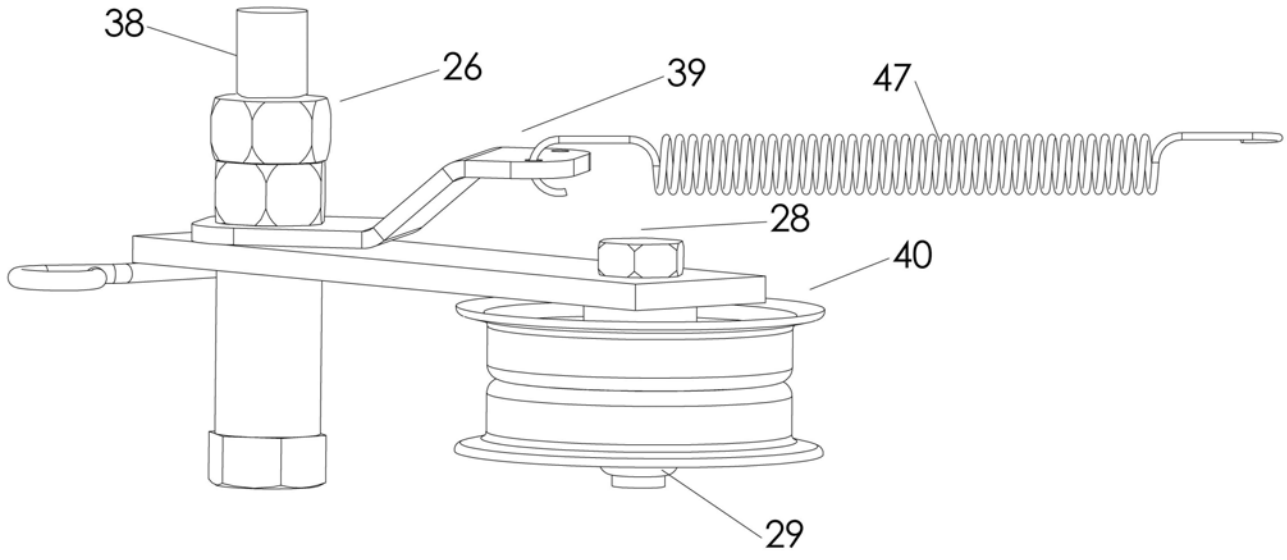

ENGINE-PULLEY CONFIGURATION

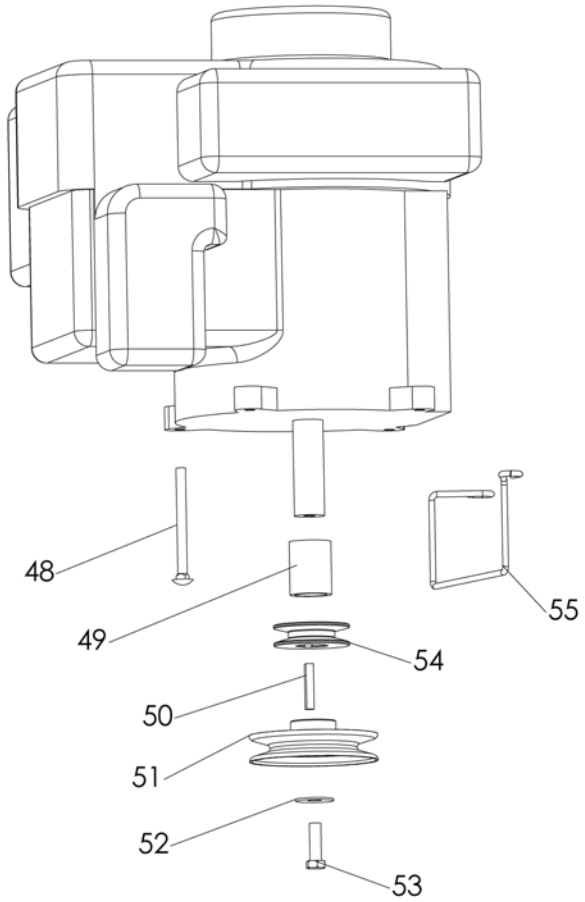

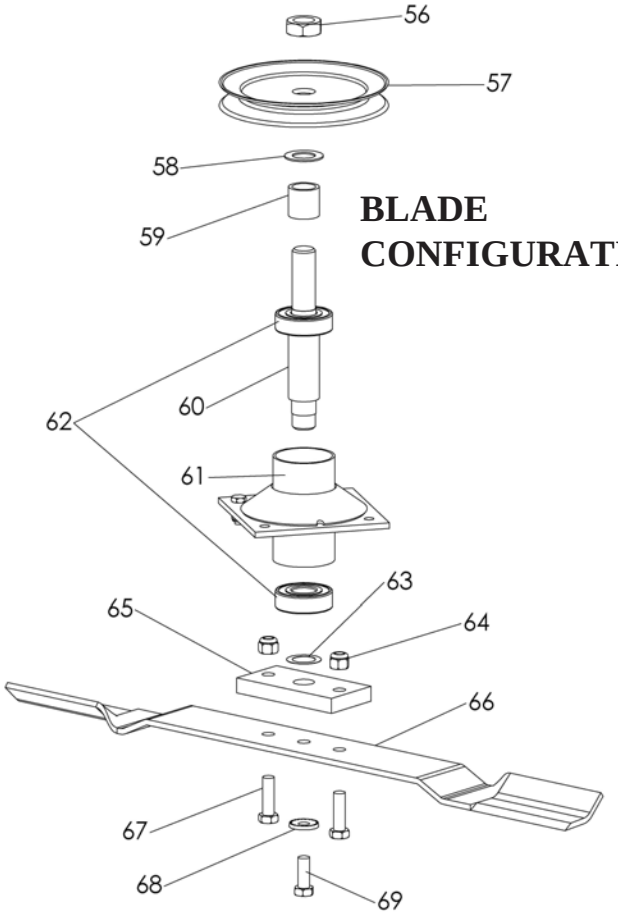

BLADE CONFIGURATION

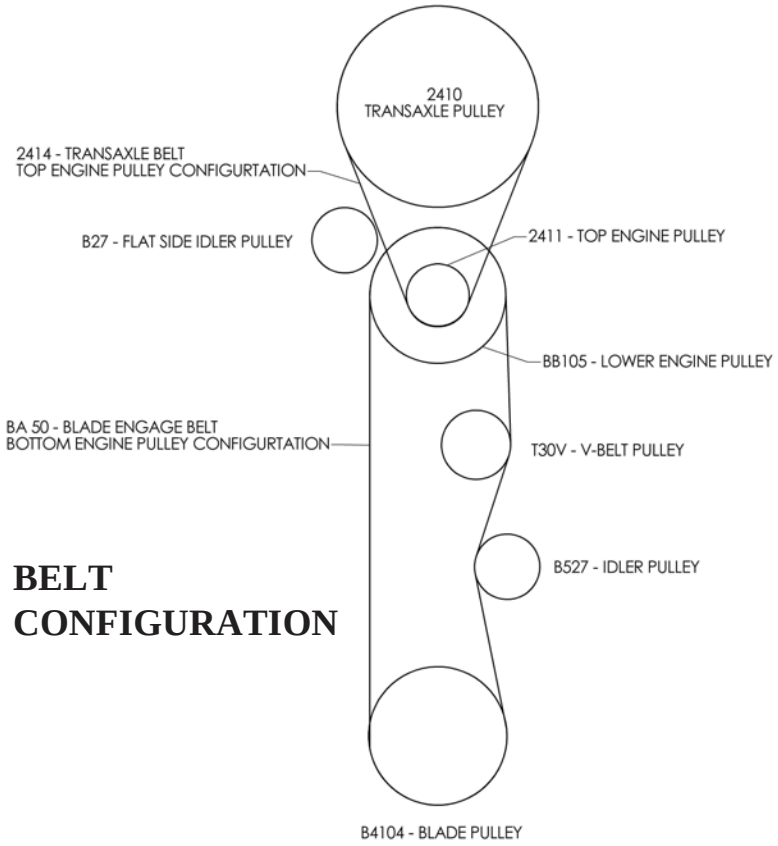

BELT CONFIGURATION

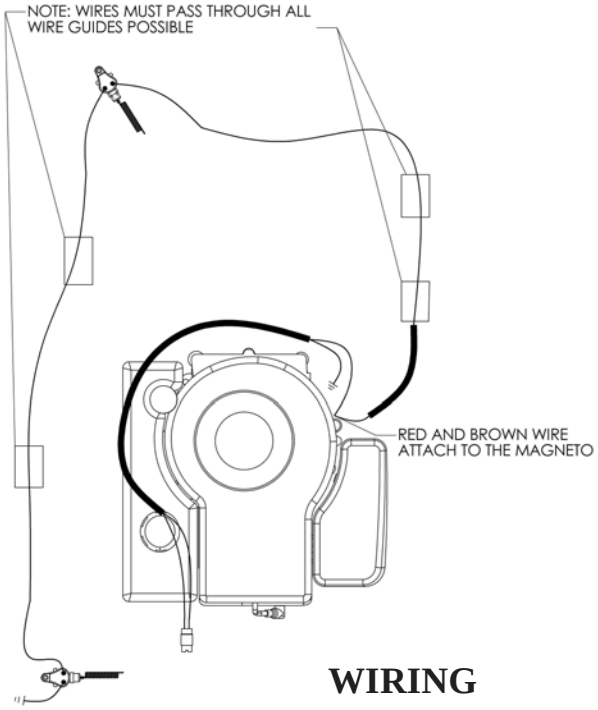

WIRING CONFIGURATION

REPLACEMENT PARTS

ITEM NO.	PART NO.	DESCRIPTION
1	SEE DETAIL	ENGINE PULLEY CONFIGURATION
2	2450TC	MOTOR BASE WELDMENT
	2451TK	ADJUSTABLE BELT GUIDE
3	2418TC	FRONT GUARD
	NB310	1/4-20 X 1/2 SSC BOLT
5	2448TK	BRUSH GUARD
6	NB596	5/16-18 X 3/4 FLANGE BOLT
7	NB503	5/16-18 X 1 3/4 BOLT
8	2449TC	DECK WELDMENT
9	2406	RUBBER DEBRIS GUARD
10	2424TK	RUBBER FLAP STRAP
11	2453TC	REAR COVER ASSEMBLY
	2452TC	REAR COVER WELDMENT
	2417TC	REAR COVER LATCH
	2069	EXTENSION SPRING
	NB501	5/16-18 X 1 BOLT
	NB170	5/16-18 NUT
	B99S	SPACER
	2077	YELLOW PLASTIC GRIP
12	SEE DETAIL	BLADE CONFIGURATION
	BA50	BA 50 BELT
13	SEE DETAIL	BLADE IDLER...CONFIG.
14	2410	TRANSAXLE PULLEY
	NB192	SET SCREW
	2414	TRANSAXLE BELT
15	2447TK	SKID RUNNER
17	2401L / 2401R	POWER TRAX TIRE/WHEEL (SHOWN)
	2415	SNOW HOG TIRE/WHEEL
18	2412	PEERLESS TRANSAXLE
19	2422TK	SAFETY SWITCH MOUNT
	NB250	1/4-20 X 3/4 BOLT
20	2456	GEARSHIFT LEVER
	2427	GEARSHIFT GRIP
	2423TC	GEARSHIFT MOUNT
	NB596	5/16-18 X 3/4 FLANGE BOLT
	NB503	5/16-18 X 1 3/4 BOLT
	NB620	1/4-28 X 3/4 BOLT
21	2402TK	HANDLE
22	2429TK	BLADE ENGAGE BAIL
23	2458TK	GROUND CONTROL BAIL
	2432	TRANSAXLE CABLE
24	4295	BLADE LATCH & CABLE ASSY

ITEM NO.	PART NO.	DESCRIPTION
1	SEE DETAIL	ENGINE PULLEY CONFIGURATION
2	2450*	MOTOR BASE WELDMENT
	2451*	ADJUSTABLE BELT GUIDE
3	2418*	FRONT GUARD
	NB310	1/4-20 X 1/2 SSC BOLT
5	2448TK	BRUSH GUARD
6	NB596	5/16-18 X 3/4 FLANGE BOLT
7	NB503	5/16-18 X 1 3/4 BOLT
8	2449*	DECK WELDMENT
9	2406	RUBBER DEBRIS GUARD
10	2424TK	RUBBER FLAP STRAP
11	2453*	REAR COVER ASSEMBLY
	2452*	REAR COVER WELDMENT
	2417*	REAR COVER LATCH
	2069	EXTENSION SPRING
	NB501	5/16-18 X 1 BOLT
	NB170	5/16-18 NUT
	B99S	SPACER
	2077	YELLOW PLASTIC GRIP
12	SEE DETAIL	BLADE CONFIGURATION
	BA50	BA 50 BELT
13	SEE DETAIL	BLADE IDLER…CONFIG.
14	2410	TRANSAXLE PULLEY
	NB192	SET SCREW
	2414	TRANSAXLE BELT
15	2447TK	SKID RUNNER
17	2401L / 2401R	POWER TRAX TIRE/WHEEL (SHOWN)
	2415	SNOW HOG TIRE/WHEEL
18	2412	PEERLESS TRANSAXLE
19	2422TK	SAFETY SWITCH MOUNT
	NB250	1/4-20 X 3/4 BOLT
20	2456	GEARSHIFT LEVER
	2427	GEARSHIFT GRIP
	2423*	GEARSHIFT MOUNT
	NB596	5/16-18 X 3/4 FLANGE BOLT
	NB503	5/16-18 X 1 3/4 BOLT
	NB620	1/4-28 X 3/4 BOLT
21	2402TK	HANDLE
22	2429TK	BLADE ENGAGE BAIL
23	2458TK	GROUND CONTROL BAIL
	2432	TRANSAXLE CABLE
24	2431	BLADE LATCH & CABLE ASSY
	NB278	1/4-20 X 1 3/4 BOLT
ITEM NO.	PART NO.	DESCRIPTION
	NB180	1/4-20 NYLOC NUT

swisherinc.com

OWNER'S MANUAL

MODEL NO.

WB80024
WB80024S
WB8524

PREDATOR 24" WALK BEHIND

Each cutter has its own model number. Each engine has its own model number. The model number for the cutter will be found on the right hand side of the drive belt housing. The model number for the engine will be found on the top of the blower fan housing.
All cutter parts listed herein may be ordered directly from Swisher Mower & Machine Co. Inc. or your nearest Swisher dealer.
All engine parts may be ordered from the nearest dealer of the engine supplied with your cutter.

WHEN ORDERING PARTS, PLEASE HAVE THE FOLLOWING INFORMATION AVAILABLE:

* PRODUCT – WALK BEHIND PREDATOR
* SERIAL NUMBER - _____
* MODEL NUMBER - _____
* ENGINE MODEL NUMBER - _____
  TYPE - _____
* PART NUMBER
* PART DESCRIPTION

TELEPHONE - 1-800-222-8183
FAX - 1-660-747-8650

SWISHER MOWER & MACHINE CO. INC.
1602 CORPORATE DRIVE P.O. BOX 67
WARRENSBURG, MO 64093

SWISHER MOWER & MACHINE CO. INC.