Visit us at : www.swisherinc.com

OWNER'S MANUAL

MODEL NO.

ST40022STDQ
ST60022Q
ST65022Q
ST65022DXQ
ST6002212V

Trim-N-Mow

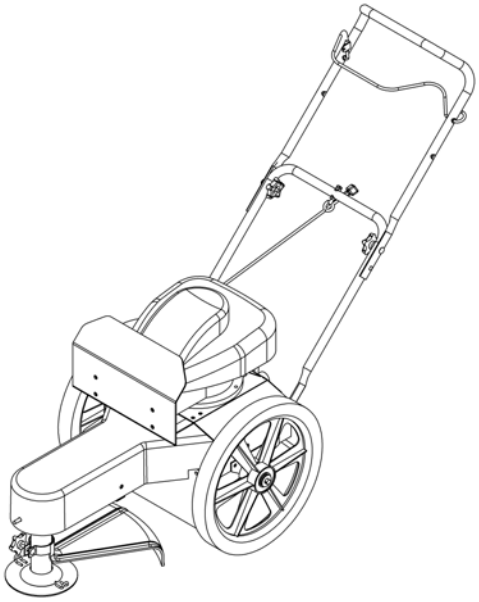

Trim-Max

IMPORTANT
Read and follow all Safety Precautions and Instructions before operating this equipment.

Rev. 05.22.2003

Assembly
Operation
Service and Adjustment
Repair Parts

1602 CORPORATE DRIVE, P.O. BOX 67, WARRENSBURG, MISSOURI 64093
PHONE 660-747-8183 FAX 660-747-8650

Manufacturing quality lawn care equipment since 1945

Made In The ***USA***

OTRIMSTD03

LIMITED WARRANTY

The manufacturer's warranty to the original consumer purchaser is: This product is free from defects in materials and workmanship for a period of two (2) years from the date of purchase by the original consumer purchaser. We will repair or replace, at our discretion, parts found to be defective due to materials or workmanship. This warranty is subject to the following limitations and exclusions:

1) Engine Warranty	All engines utilized on our products have a separate warranty extended to them by the individual engine manufacturer. Any engine service difficulty is the responsibility of the engine manufacturer and in no way is Swisher Mower Co., Inc. or its agents responsible for the engine warranty. The Briggs & Stratton Engine Service Hot-Line is 1-800-233-3723. The Tecumseh Engine Service Hot-Line is 1-800-558-5402.
2) Commercial Use	This product is not intended for commercial use and carries no commercial warranty.
3) Limitation	This warranty applies only to products which have been properly assembled, adjusted, and operated in accordance with the instructions contained within this manual. This warranty does not apply to any product of Swisher Mower Co., Inc., that has been subject to alteration, misuse, abuse, improper assembly or installation, shipping damage, or to normal wear of the product.
4) Exclusions	Excluded from this warranty are normal wear, normal adjustments, and normal maintenance.

In the event you have a claim under this warranty, you must return the product to an authorized service dealer. All transportation charges, damage, or loss incurred during transportation of parts submitted for replacement or repair under this warranty shall be borne by the purchaser. Should you have any questions concerning this warranty, please contact us toll-free at 1-800-222-8183. The model number, serial number, date of purchase, and the name of the authorized Swisher dealer from whom you purchased the mower will be needed before any warranty claim can be processed.

THIS WARRANTY DOES NOT APPLY TO ANY INCIDENTAL OR CONSEQUENTIAL DAMAGES AND ANY IMPLIED WARRANTIES ARE LIMITED TO THE SAME TIME PERIODS STATED HEREIN FOR ALL EXPRESSED WARRANTIES. Some states do not allow the limitation of consequential damages or limitations on how long an implied warranty may last, so the above limitations or exclusions may not apply to you. This warranty gives you specific legal rights and you may have other rights, which vary from state-to-state. This is a limited warranty as defined by the Magnuson-Moss Act of 1975.

Safety Instructions

This Safety Alert Symbol indicates important messages in this manual. When you see this symbol, carefully read the message that follows and be alert to the possibility of personal injury.

- Read, understand and follow all instructions in the manual and on the trimmer before starting
- Read this manual carefully. Become familiar with the controls and how to operate the unit properly.
- Only allow responsible adults, who are familiar with the instructions, to operate the unit.
- Clear the area of objects such as rocks, toys, etc. that could be thrown by the unit.
- Be sure the area is clear of other people before trimming. Stop the unit if anyone enters the area.
- Be aware of the direction of the trimmer discharge and do not direct it at anyone. Do not direct trimmer discharge at breakable objects, such as windows, etc.
- Do not operate trimmer without all guards and shields in place.
- Never leave the machine running unattended.
- Trim only in daylight or good artificial light.
- Do not operate the trimmer while under the influence of alcohol or drugs.
- Watch for traffic when operating near roadways.
- Use the trimmer as the manufacturer intended and as described in the manual.
- Do not operate trimmer if it has been dropped or damaged in any manner. Always have the damage repaired before operating.
- Always wear safety glasses or eye shields when using the trimmer.
- Dress properly. Do not operate the trimmer when barefoot or wearing open sandals. Wear only solid shoes for good traction when trimming. Wear long sleeved shirts or jackets, also long pants. Do not trim in shorts.
- Keep your eyes and mind on your trimmer and the area being trimmed.
- Do not let other interests distract you.
- Do not put hands and feet near or under rotating parts.
- Before cleaning, inspecting or repairing your trimmer, stop the engine and disconnect the spark plug wire and keep it away from the spark plug to prevent accidental starting.
- Do not operate the trimmer if it vibrates abnormally. Excessive vibration is a sign of damage. Stop the engine and safely check for damage and repair as required.
- Do not operate the trimmer in wet grass, where good footing may not be possible. Walk; never run
- Stop the trimmer when crossing gravel drives, etc.

Slope Operation

Slopes are a major factor related to loss of control and slip accidents, which can result in severe injury. All slopes require extra caution. If you feel uneasy on it do not trim it.

- DO: Trim across the face of a slope and not up and down.
- DO: Remove objects such as rocks, tree limbs, etc.
- DO: Watch for holes, ruts or bumps. Tall grass can hide obstacles.
- DO NOT: Mow near drop-offs, ditches or embankments. The operator could loose footing or balance.
- DO NOT: Trim excessively steep slopes
- DO NOT: Trim on wet grass. Reduced footing could cause slipping.

Children

- Keep children out of the area and under the watchful care of another responsible adult.
- Be alert and turn the machine off if children enter the area.
- Before and when backing, look behind and down for small children.
- Never allow children to operate this machine.
- Use extra care when approaching blind corners, shrubs, trees or other objects that may obstruct vision.

Service

- Use extra care handling gasoline and other fuels. They are flammable and vapors are explosive.
- Use only an approved container.
- Never remove gas cap or add fuel with the engine running.
- Allow engine to cool before refueling. Do not smoke
- Never refuel the machine indoors.
- Never store the machine or fuel container where there is an open flame, such as a water heater.
- Never run a machine inside a closed area.
- Keep nuts and bolts tight and equipment in good condition.
- Never tamper with safety devices.
- Keep machine free of grass, leaves or other debris build up. Clean oil or fuel spillage. Allow machine to cool before storing.
- Stop and inspect the equipment if you strike an object. Repair if necessary before restarting.
- Never make repairs or adjustments with the engine running.

The operation of any cutter can encounter foreign objects to be thrown into the eyes, resulting in severe eye damage. Always wear certified safety glasses or wide-vision safety goggles for over spectacles before staring any cutting machine and while operating such a machine.

The operation of any cutter produces sound waves that are damaging to the human ear. Ear protection is recommended.

CAUTION!
Tragic accidents can occur if the operator is not alert to the presence of children. Children are often attracted to the machine and the mowing activity. ***Never assume that children will remain where you last saw them.***

Do not operate the trimmer if it vibrates abnormally. Excessive vibration is a sign of Damage. Stop the engine and safely check for damage and repair as required

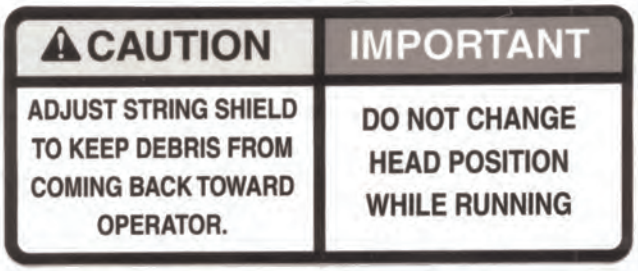

Caution Notice Decal
OD67

Trimmer Head
Instruction Decal
OD68

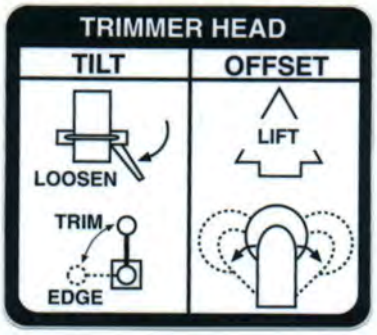

Trim-Max Decal
OD64

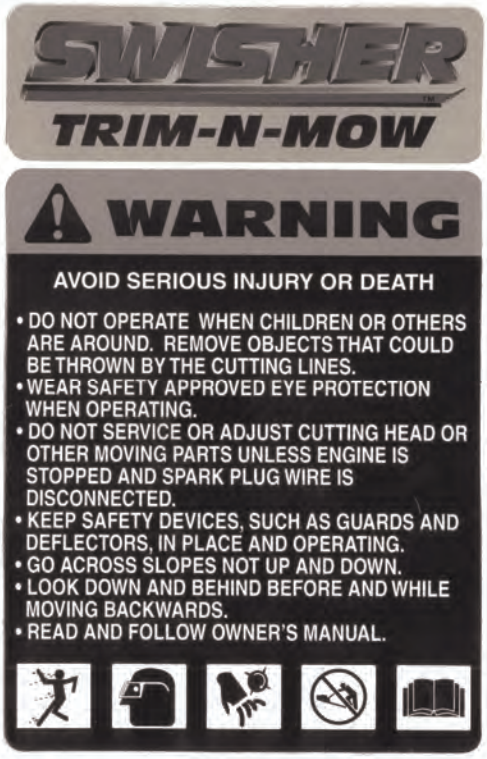

Trim-N-Mow Decal
OD65

Assembly

Contents of Box:

- Trimmer
- Parts bag containing:
- Manual
- Engine manual
- Safety goggles
- Bottle of engine oil
- 4 sets of .155 trimmer line

Tools Required:

- ½” wrench

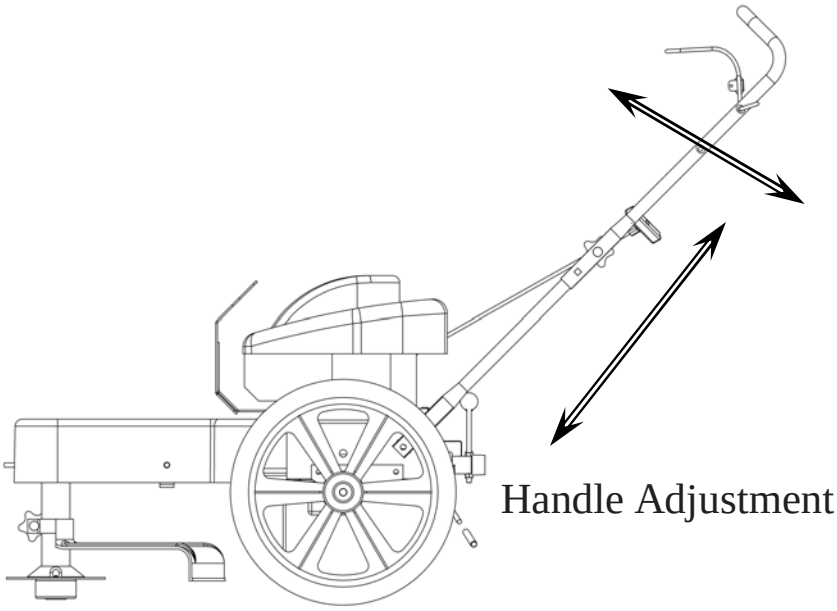

Installation of handles

- Remove loose fasteners from lower handles.
- Pivot handles up and align lower hole in handles with hole on trimmer frame. Install hardware removed in previous step. Snug, but do not tighten bolts.
- Pivot upper handles to fit the lower handles. Tighten knobs.
- Adjust handles for comfortable operation.
- Tighten all bolts.
- Hold the control bail against the handle and slowly pull the engine recoil handle rope out. Thread the rope through the holder in the center of the lower handle.

Handles may be adjusted up and down and in and out for comfortable operation.

Install Yellow Plastic Sleeve On Tilt Handle

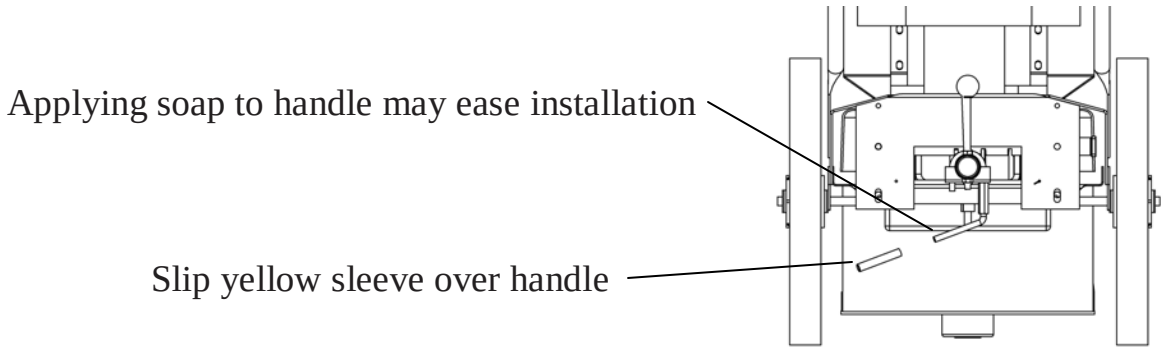

Preparing Unit For First Use

- Fill engine crankcase with oil. A bottle has been provided with this unit. DO NOT OVERFILL.
- Fill the engine fuel tank with gasoline. GASOLINE SHOULD BE ADDED OUTSIDE IN A WELL-VENTILATED AREA.
- Check to ensure string has been installed properly. A diagram is provided just above the wheel for proper installation.

Operation

Important! To ensure proper operation, clean the engine and trimmer regularly. See page for details.

To start the trimmer:

- Remove any built up debris from engine.
- Pull control bail against the handle and hold.
- Push primer button on engine as directed.
- Pull back sharply on recoil starter handle.
- Begin trimming.

Important! For safest operation, make sure debris is directed away from you and others.
Important! 12 Volt Units. For optimum battery performance, you should run engine for at least 15 minutes after each start to keep battery charged

To stop the trimmer:

- Release the control bail. Engine will stop immediately.

Trimming Hints

- Do not lift the trimmer head when trimming. Let the head rest lightly touching the ground.
- Keep an eye on the length of the trimmer strings. As the strings get shorter they become less effective at cutting and will take longer to trim properly. Replace the string as necessary. (See installing string)
- Do not trim wet grass.
- Use caution when trimming slopes.
- Use the proper length of string. Using a string too long for the unit will cause stalling and unacceptable operation.

Installing String

Important! Use the proper length of string. Using a string too long for the unit will cause stalling and unacceptable operation.

3 – 5 HP use 16” String
5+ HP use 18” String

OD63

- Loosely fold string in half.
- Place loop of string against outside of loop on the trimmer head.
- Bring ends around and through the loop and over the string loop.
- Pull ends to tighten loop.

Trim-Max Operation

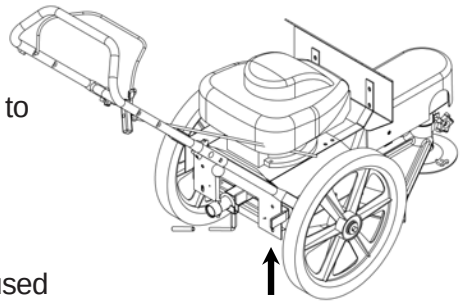

Trim-Max Pivot Adjustment

The Trim-Max trimmer is designed to also be used as an edge trimmer and to offset left to right for easier close trimming.

Edge trimming/ Bevel Cutting

The trimmer disk may be tilted from horizontal to vertical so that it may be used as an edge trimmer. The head may also be tilted slightly to trim closer. This may be handy for trimming foundations without damaging the siding.

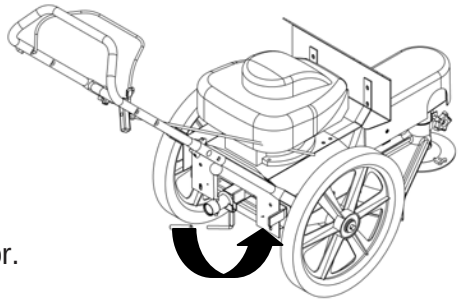

Trim-Max Tilt Adjustment

To Tilt:
- Stop unit.
- Make sure head is in the straight forward position. (see offset operation)
- Loosen the trimmer tilt clamp lever. (Clockwise)
- Tilt head to desired position.
- Tighten trimmer tilt clamp lever. (Counter Clockwise)
- Adjust Lower trimmer shield to keep debris from coming back at operator.

Offset trimming.

The trimmer head may be offset to the left or right to allow trimming under bushes, etc.

To Offset:
- Stop unit.
- Raise offset lever.
- Push or pull handles to achieve desired offset.
- Release offset lever. Make sure head has locked into position.
- Adjust lower trimmer shield to keep debris from coming back at operator.

Important! Note direction of debris when offsetting head. Offsetting trimmer to the left is recommended.

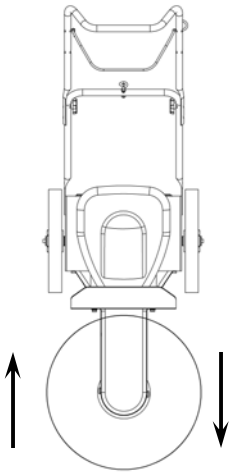

Direction Of Debris

Trimmer Maintenance

Make sure your trimmer is in safe working condition by keeping the following guidelines in mind every time you use your trimmer.

- Keep trimmer in good operating condition and keep all guards and shields in place. DO NOT operate this trimmer if any of the shields and guards are missing.
- Check all fasteners for secure fit to keep equipment in safe working order. Make adjustments as necessary.
- To reduce fire hazards, keep engine free of grass leaves or excessive grease.
- DO NOT operate trimmer with a damaged or missing muffler. DO NOT tamper with exhaust system; this may cause a fire hazard.
- DO NOT operate engine if air cleaner or the cover over the carburetor air intake is missing. Removal of these parts could create a fire hazard.
- Before cleaning, making adjustments or repairing the trimmer, STOP engine, disconnect spark plug wire and allow engine to cool.
- Handle Gasoline with care. DO NOT smoke or use open flame near gasoline. Use only approved gasoline containers. Never fuel or run trimmer in poorly ventilated areas, such as a garage or utility building.
- Always replace fuel tank cap. Be sure to clean up any spilled gasoline.
- Do not change the engine governor settings or over-speed the engine; severe injury or damage may result.
- Never store mower, with gasoline in the tank, inside a building where fumes may reach an open flame or spark. Always allow engine to cool before storing

NEVER ADD GASOLINE TO A HOT ENGINE – ALLOW ENGINE TO COOL BEFORE ADDING GASOLINE

WARNING – ALWAYS STOP ENGINE AND DISCONNECT SPARK PLUG WIRE BEFORE PERFORMING ANY ADJUSTMENTS OR SERVICE

Engine

- Refer to the engine service manual provided with this unit.

Belt

- Occasionally check the belt for wear. A worn belt should be replaced.

Belt Adjustment

- The TRIM-N-MOW has an automatic belt tightener and needs no further adjustment
- The TRIM-MAX has an automatic belt tightener that automatically adjusts when the head is tilted. If you do not regularly tilt the head on your trimmer, it is recommended that you loosen the head twice a year. (See edge trimming)

Belt Replacement

- Remove front belt cover.
- Push trimmer head toward back of unit, compressing tensioner spring.
- Remove old belt.
- Install new belt by first routing belt under the engine and around the engine pulley.
- Push trimmer head toward back of unit, compressing tensioner spring.
- Install belt over front pulley.
- Release trimmer head. Ensure that belt is correctly installed in the groove of the engine and front pulleys.

Re install front belt shield.

Trim-N-Mow

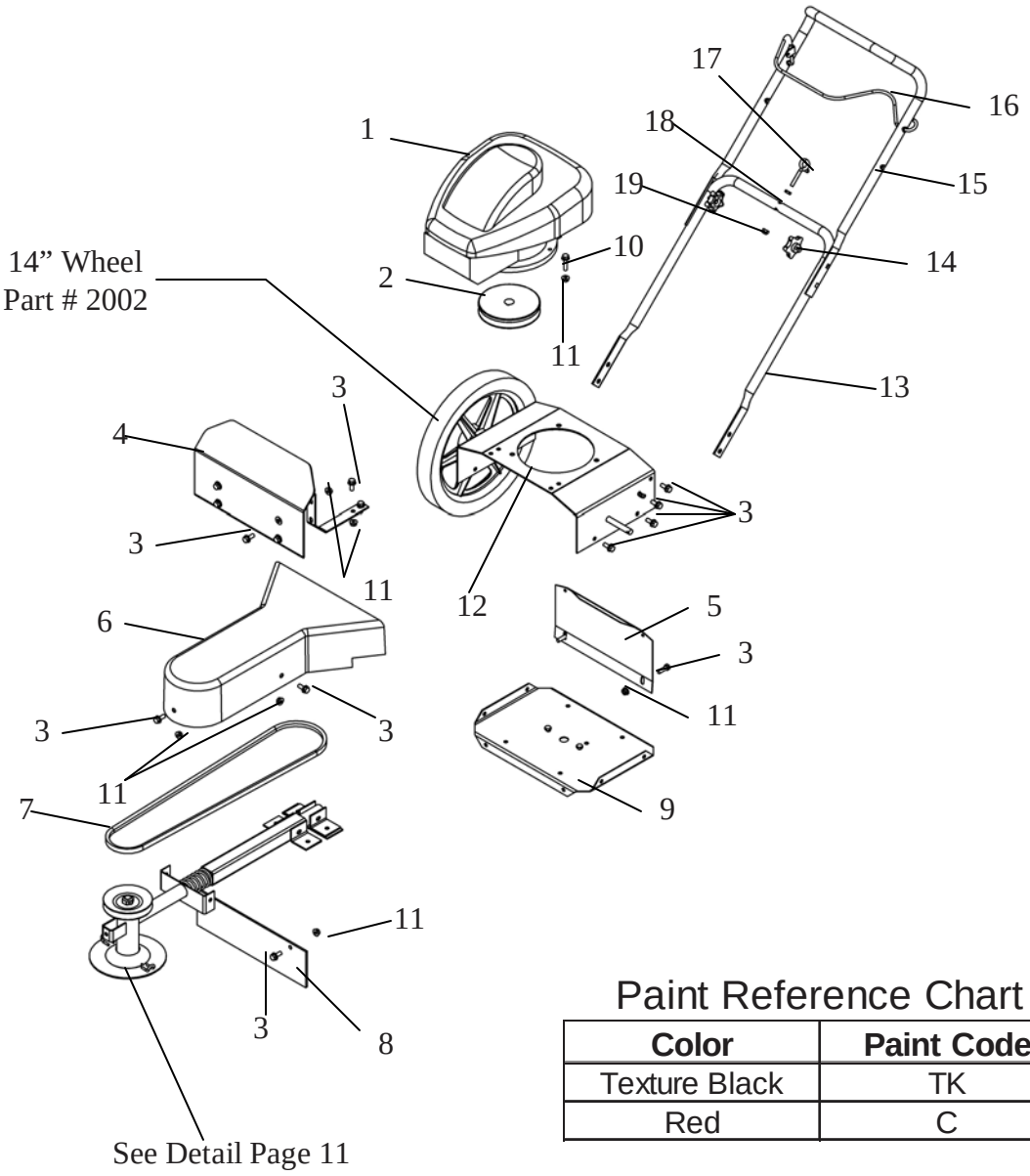

Paint Reference Chart

Color	Paint Code
Texture Black	TK
Red	C

Item #	Description	Part #
1	Briggs & Stratton Engine	N/A
2	Engine Pulley- 6"	2050
3	5/16-18 X 3/4 Serr Flg Bolt	NB596
4	Metal Debris Shield	2092
5	Rear Cover	2026
6	Belt Guard	2019
7	Blade Belt	2113
8	Rubber Shield	2027
9	Lower Motor Base	2006
10	5/16-18 X 1 1/4 Serrated Flange Bolt	NB253
11	5/16-18 Serrated Flange Nut	NB170
12	Upper Motor Base	2005TC

Item #	Description	Part #
13	Lower Handle	2089
14	Black Plastic Knob	2030
15	Upper Handle	10578TK
16	Operator Presence Bail	2020
17	Rope Guide	2046
18	5/16-18 Jam Nut	NB173
19	5/16-18 Nyloc Nut	NB181
Not Shown	5/16-18 X 2 Carriage Bolt	NB590
Not Shown	3/8-24 X 1 Engine Bolt Locktite	NB238N
Not Shown	P Washer Bellvl. PLN .413 X .945 X .11	NB607
Not Shown	5/16-18 X 1 1/4 Serrated Flange Bolt	NB253
Not Shown	Operator Presence Cable	2034B

Trimmer Head Assembly for Standard

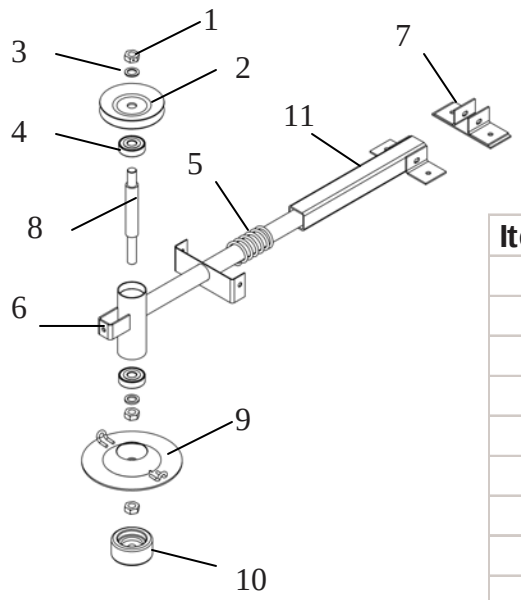

Item #	Description	Part #
1	5/8-11 2 Way Lock Jam Nut	NB595
2	Blade Pulley- 4.5"	2049
3	5/8 ID X 1 OD 14 GA Washer	NB149
4	Blade Bearing	B985/8
5	Compression Spring	2033
6	Head Weldment	SUBSTD-A
7	Std Trimmer Stabilizer Weldment	2032
8	Spinner Shaft	2024
9	Trimmer Spinner Disc Weldment	2021TC
10	Threaded Roller	2035
11	Trimmer Slide Weldment	2007TC

Paint Reference Chart

Color	Paint Code
Texture Black	TK
Red	C

Trimmer Head Assembly for Deluxe and 12V Deluxe

Item #	Description	Part #
12	Blade Bearing	B98 5/8
13	Head Weldment	2110TC
14	Bearing Sleeve	2023
15	Spinner Shaft	2124
16	Trimmer Slide Weldment	2107
17	Knob - Yellow	2079
18	Tilt Clamp U Bolt	2075
19	5/16-18 Nyloc Nut	NB181
20	Handle Assembly	2080
21	5/8-11 Serr Flange Nut	**NB598**

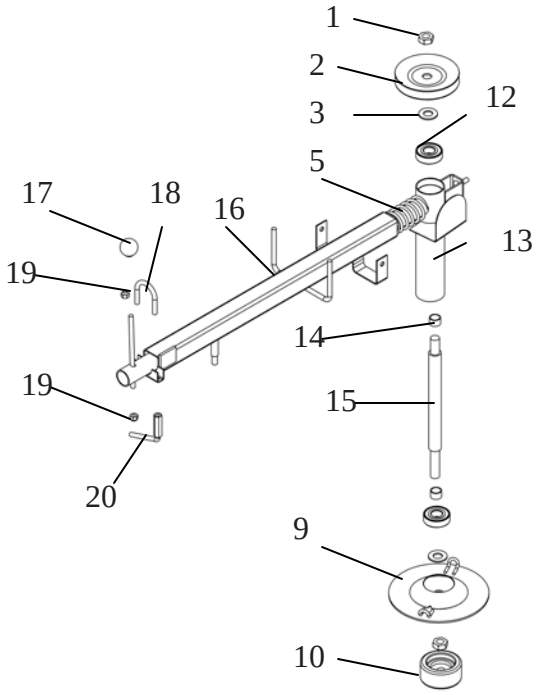

Trim-Max Axle Setup

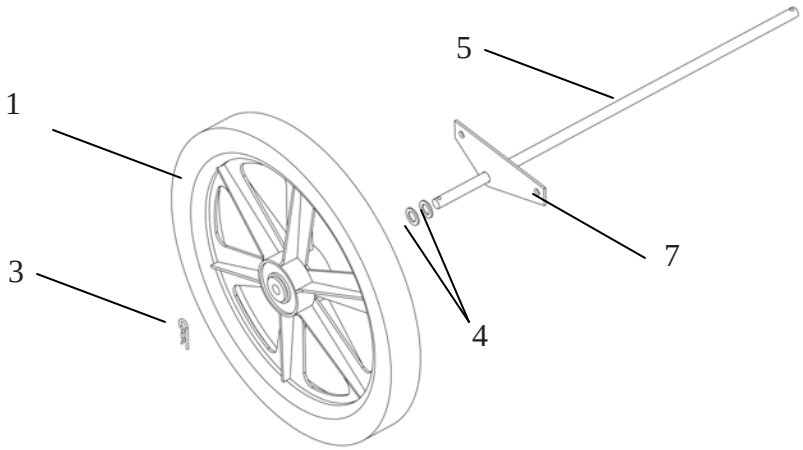

Deluxe Axle

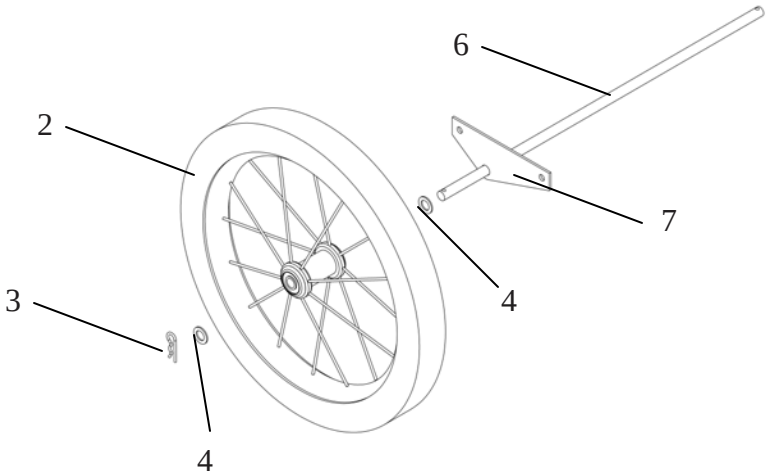

12 Volt Deluxe Axle

Item #	Description	Part #
1	16" Wheel	2003
2	16" Steel Spoke Wheel	2094
3	#3 Hair Pin	NB127
4	1/2 USS Flat Washer ZP	NB555
5	Axle	14417
6	Axle (Zinc Plated)	2093Z
7	Plate - Axle	2106TC

Deluxe

Paint Reference Chart

Color	Paint Code
Texture Black	TK
Red	C

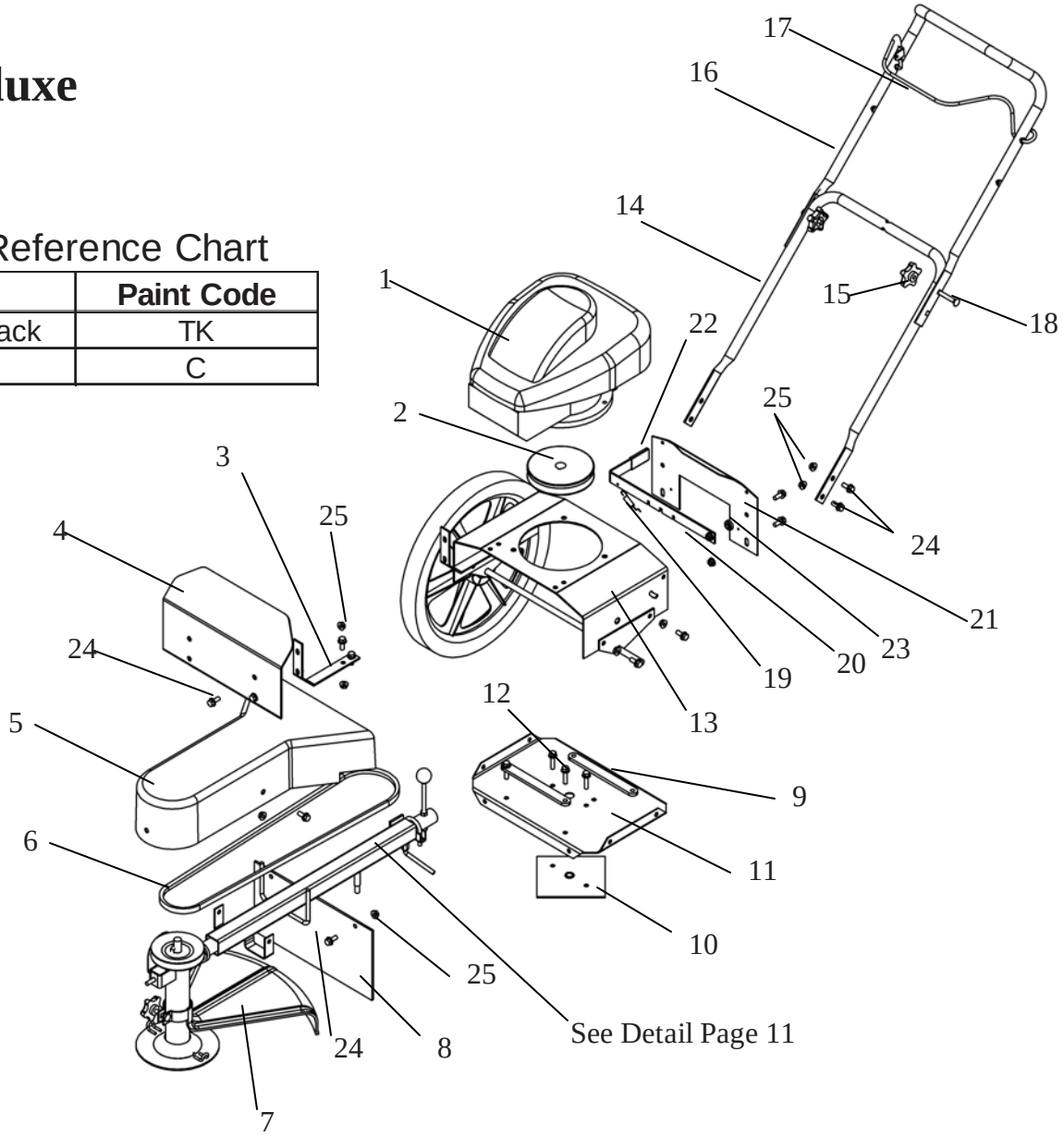

Item #	Description	Part #
1	Briggs & Stratton Engine	N/A
2	Pulley & Washer	2065
3	Sheild Strap	2018
4	Shield - Metal Debris	2092TK
5	Belt Guard	2119
6	Blade Belt	2113
7	Lower Shield Sub Assy.	2076
8	Rubber Shield	2127
9	Wear Strip	2116
10	Pivot Plate Weldment	2073TK
11	Lower Motor Base	2006TC
12	5/16-18 X 1 1/4 Serrated Flange Bolt	NB253
13	Upper Motor Base	2005TC
14	Lower Handle	10397

Item #	Description	Part #
16	Upper Handle	10578TK
17	Operator Presence Bail	2020
18	5/16-18 X 2 Carriage Bolt	NB590
19	Spring	2069
20	Pivot Stop	2040TC
21	Rear Cover	2126TC
22	Handle Grip, Pivot	2077
23	Spacer	B99S
24	5/16-18 X 3/4 Serr Flg Bolt	NB596
25	5/16-18 Serrated Flange Nut	NB170
Not Shown	3/8-24 X 1 Engine Bolt Locktite	NB238N
Not Shown	SP Washer Bellvl. PLN .413 X .945 X .118	NB607
Not Shown	5/16-18 X 1 1/4 Serrated Flange Bolt	NB253
Not Shown	Operator Presence Cable	2034B

12 Volt Deluxe

Paint Reference Chart

Color	Paint Code
Texture Black	TK
Red	C

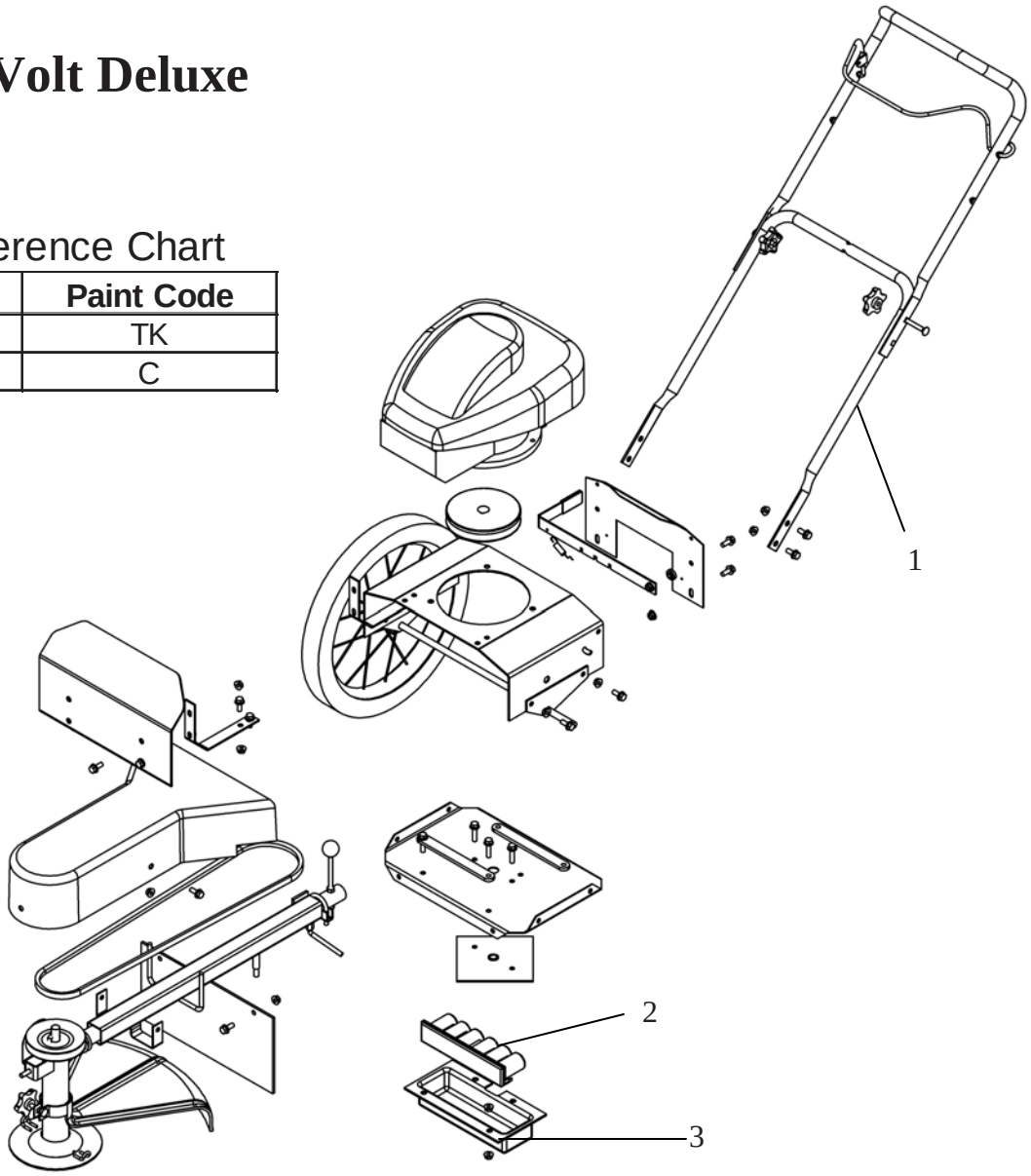

For Additional Parts
See Page 13

Item #	Description	Part #
1	12 Volt Handle Sub-Assy- Lower	2089-12V
2	Battery for Weedtrimmer	2101
3	Battery Cover	2105
Not Shown	Wiring Harness	2120B
Not Shown	Key Switch	2102
Not Shown	Keys For Key Switch (set of two)	KSK

Notes

Visit us at: www.swisherinc.com

OWNER'S MANUAL

MODEL NO.

ST40022STDQ
ST60022Q
ST65022Q
ST65022DXQ
ST6002212V

Each trimmer has its own model number. Each engine has its own model number. The model number for the trimmer will be found on the right hand side of the drive belt housing. The model number for the engine will be found on the top of the blower fan housing.
All trimmer parts listed herein may be ordered directly from Swisher Mower & Machine Co. Inc. or your nearest Swisher dealer.
All engine parts may be ordered from the nearest dealer of the engine supplied with your mower.

WHEN ORDERING PARTS, PLEASE HAVE THE FOLLOWING INFORMATION AVAILABLE:

* PRODUCT – TRIMMER
* SERIAL NUMBER - _____
* MODEL NUMBER - _____
* ENGINE MODEL NUMBER - _____
  TYPE - _____
* PART NUMBER WITH PAINT CODE
* PART DESCRIPTION

TELEPHONE - 1-800-222-8183
FAX - 1-660-747-8650

SWISHER MOWER & MACHINE CO. INC.
1602 CORPORATE DRIVE
P.O. BOX 67
WARRENSBURG, MO 64093

SWISHER MOWER & MACHINE CO. INC.

PRINTED IN U.S.A.